TYPE OF FK BALL BEARING UNITS AND BEARINGS

Pillow Blocks

UCP2(Normal-duty).....25
HCP2(Normal-duty).....26
UCLP2(Normal-duty).....27
UKP2(Normal-duty).....28
UCAK2(Normal-duty).....29
UCPK2(Normal-duty).....30
UCPE2(Normal-duty).....31
UCASE2(Normal-duty).....32
UCCP2(Normal-duty).....33
UCPX(Medium-duty).....34
UKPX(Medium-duty).....35
UCP3(Heavy-duty).....36
UKP3(Heavy-duty).....37

Flange Types

UCF2(Normal-duty).....38
HCF2(Normal-duty).....39
UKF2(Normal-duty).....40
UCFS2(Normal-duty).....41
UCCF2(Normal-duty).....42
UCFX(Medium-duty).....43
UKFX(Medium-duty).....44
UCF3(Heavy-duty).....45
UKF3(Heavy-duty).....46
UCFU2(Normal-duty).....47
HCFU2(Normal-duty).....48
UCFC2(Normal-duty).....49
HCFC2(Normal-duty).....50
UKFC2(Normal-duty).....51
UCME2(Normal-duty).....52
HCFE2(Normal-duty).....53
UCCFC2(Normal-duty).....54
UCFCX(Medium-duty).....55
UCFS3(Heavy-duty).....56
UCFL2(Normal-duty).....57
HCFL2(Normal-duty).....58
UKFL2(Normal-duty).....59
UCFT2(Normal-duty).....60
HCFT2(Normal-duty).....61
UCCJT2(Normal-duty).....62
HCCJT2(Normal-duty).....63
UCCFL2(Normal-duty).....64
UCFLX(Medium-duty).....65
UKFLX(Medium-duty).....66
UCFL3(Heavy-duty).....67

Take-Up Units Types

UCT2(Normal-duty).....68
HCT2(Normal-duty).....69
UKT2(Normal-duty).....70
UCST2(Normal-duty).....71
UCCT2(Normal-duty).....72
UCTX(Medium-duty).....73
UKTX(Medium-duty).....74
UCT3(Heavy-duty).....75

Cartridge Types

UCC2(Normal-duty).....76
HCC2(Normal-duty).....77
UKC2(Normal-duty).....78
UCCX(Medium-duty).....79
UKCX(Medium-duty).....80
UCC3(Heavy-duty).....81

Other Typical Types

UCPH2(Normal-duty).....82
UCPA2(Normal-duty).....83
UCPG2(Normal-duty).....84
UCPW2(Normal-duty).....85
UCTB2(Normal-duty).....86
UCSHE2(Normal-duty).....87
UCFA2(Normal-duty).....88
UCFB2(Normal-duty).....89
UCHA2(Normal-duty).....90
UCHE2(Normal-duty).....91

Light Duty Types

SAFD2(Light-duty).....92
SBFD2(Light-duty).....92
SAFW2(Light-duty).....93
SBFW2(Light-duty).....93
SAFTD2(Light-duty).....94
SBFTD2(Light-duty).....94
SAFCT2(Light-duty).....95
SBFCT2(Light-duty).....95
SAFX2(Light-duty).....96
SBFX2(Light-duty).....96
SAPSD2(Light-duty).....97
SBPSD2(Light-duty).....97
SAFN2(Light-duty).....98
SBFN2(Light-duty).....98
SAFTN2(Light-duty).....99
SBFTN2(Light-duty).....99
SACFTR2(Light-duty).....100
SBCFTR2(Light-duty).....100
SALF2(Light-duty).....101
SBLF2(Light-duty).....101

Rubber Mounted Units Types

SAPR2(Light-duty).....102
SBPR2(Light-duty).....102
RCSM2(Light-duty).....103
RCSMS2(Light-duty).....103
SAR2(Light-duty).....104
SBR2(Light-duty).....104

Pressed Housing Types

SAPP2(Light-duty).....105
SBPP2(Light-duty).....105
SAPF2(Light-duty).....106
SBPF2(Light-duty).....106
SAPFL2(Light-duty).....107
SBPFL2(Light-duty).....107
SAPFT2(Light-duty).....108
SBPFT2(Light-duty).....108

Ball Bearing Inserts

UC2(Normal-duty).....109
HC2(Normal-duty).....110
UK2(Normal-duty).....111
UCX(Medium-duty).....112
UKX(Medium-duty).....113
UC3(Heavy-duty).....114
HC3(Heavy-duty).....115
UK3(Heavy-duty).....116
SER2(Normal-duty).....117
SA2(Light-duty).....118
SB2(Light-duty).....119
SC2(Light-duty).....120
SC3(Heavy-duty).....120
K000(Light-duty).....121
U000(Light-duty).....121

Stainless Steel Bearing Units

Material.....122
Types.....122

Silver Series

UP000(Light-duty).....123
UFL000(Light-duty).....124
KFL000(Light-duty).....124

Thermoplastic Mounted Units

Material.....125
Accessories.....126
MUCPPL2(Light-duty).....127
MUCFPL2(Light-duty).....127
MUCFLPL2(Light-duty).....128
MUCTBL2(Light-duty).....128
MUCFBPL2(Light-duty).....129
MUCFCPL2(Light-duty).....129
MUCTPL2(Light-duty).....130
MUCHPL2(Light-duty).....130
MUCPAPL2(Light-duty).....131
MUCHAPL2(Light-duty).....131

Pillow Blocks

UCP 2 (normal-duty)

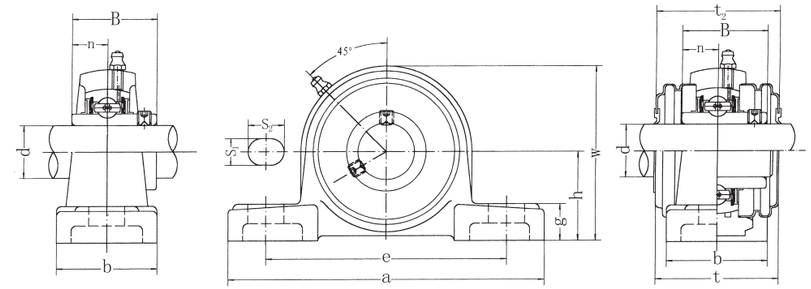

UCP-C1(D1)

Unit No.	Dimensions mm / in. d	h	a	e	b	s1	s2	g	w	t	B	n	Bolt Size mm / inch	Bearing No.	Housing No.	Weight (kg)
UCP201	12	30.2	127	95	38	13	19	14	62	44.5	31	12.7	M10	UC201	P203	0.69
UCP201-8	1/2	1-3/16	5	3-3/4	1-1/2	1/2	3/4	9/16	2-7/16	1-3/4	1.2205	0.500	3/8	UC201-8		0.69
UCP202	15	30.2	127	95	38	13	19	14	62	44.5	31	12.7	M10	UC202	P203	0.69
UCP202-9	9/16	1-3/16	5	3-3/4	1-1/2	1/2	3/4	9/16	2-7/16	1-3/4	1.2205	0.500	3/8	UC202-9		0.69
UCP202-10	5/8													UC202-10		0.69
UCP203	17	30.2	127	95	38	13	19	14	62	44.5	31	12.7	M10	UC203	P203	0.68
UCP203-11	11/16	1-3/16	5	3-3/4	1-1/2	1/2	3/4	9/16	2-7/16	1-3/4	1.2205	0.500	3/8	UC203-11		0.67
UCP204	20	33.3	127	95	38	13	19	14	65	44.5	31	12.7	M10	UC204	P204	0.66
UCP204-12	3/4	1-5/16	5	3-3/4	1-1/2	1/2	3/4	9/16	2-9/16	1-3/4	1.2205	0.500	3/8	UC204-12		0.66
UCP205	25	36.5	140	105	38	13	19	15	71	48	34.1	14.3	M10	UC205	P205	0.81
UCP205-13	13/16													UC205-13		0.85
UCP205-14	7/8	1-7/16	5-1/2	4-1/8	1-1/2	1/2	3/4	19/32	2-25/32	1-57/64	1.3425	0.563	3/8	UC205-14		0.83
UCP205-15	15/16													UC205-15		0.82
UCP205-16	1													UC205-16		0.81
UCP206	30	42.9	160	121	44	17	20	17	84	53	38.1	15.9	M14	UC206	P206	1.24
UCP206-17	1-1/16													UC206-17		1.27
UCP206-18	1-1/8	1-11/16	6-19/64	4-3/4	1-47/64	43/64	25/32	21/32	3-5/16	2-5/64	1.5000	0.626	1/2	UC206-18		1.26
UCP206-19	1-3/16													UC206-19		1.24
UCP206-20	1-1/4													UC206-20		1.23
UCP207	35	47.6	167	127	48	17	20	18	93	59.5	42.9	17.5	M14	UC207	P207	1.58
UCP207-20	1-1/4													UC207-20		1.64
UCP207-21	1-5/16	1-7/8	6-9/16	5	1-7/8	43/64	25/32	45/64	3-21/32	2-11/32	1.6890	0.689	1/2	UC207-21		1.61
UCP207-22	1-3/8													UC207-22		1.58
UCP207-23	1-7/16													UC207-23		1.55
UCP208	40	49.2	184	137	54	17	20	18	100	69	49.2	19	M14	UC208	P208	1.89
UCP208-24	1-1/2	1-15/16	7-1/4	5-13/32	2-1/8	43/64	25/32	45/64	3-15/16	2-23/32	1.9370	0.748	1/2	UC208-24		1.93
UCP208-25	1-9/16													UC208-25		1.90
UCP209	45	54.0	190	146	54	17	20	20	106	69	49.2	19	M14	UC209	P209	2.14
UCP209-26	1-5/8													UC209-26		2.24
UCP209-27	1-11/16	2-1/8	7-15/32	5-3/4	2-1/8	43/64	25/32	25/32	4-11/64	2-23/32	1.9370	0.748	1/2	UC209-27		2.20
UCP209-28	1-3/4													UC209-28		2.14
UCP210	50	57.2	206	159	60	20	23	21	113	74.5	51.6	19	M16	UC210	P210	2.66
UCP210-29	1-13/16													UC210-29		2.78
UCP210-30	1-7/8	2-1/4	8-1/8	6-1/4	2-3/8	25/32	29/32	53/64	4-29/64	2-15/16	2.0315	0.748	5/8	UC210-30		2.73
UCP210-31	1-15/16													UC210-31		2.68
UCP210-32	2													UC210-32		2.64
UCP211	55	63.5	219	171	60	20	23	23	125	76	55.6	22.2	M16	UC211	P211	3.31
UCP211-32	2													UC211-32		3.46
UCP211-33	2-1/16	2-1/2	8-5/8	6-47/64	2-3/8	25/32	29/32	29/32	4-59/64	3	2.1890	0.874	5/8	UC211-33		3.40
UCP211-34	2-1/8													UC211-34		3.35
UCP211-35	2-3/16													UC211-35		3.29
UCP212	60	69.8	241	184	70	20	23	25	138	89	65.1	25.4	M16	UC212	P212	4.90
UCP212-36	2-1/4													UC212-36		5.03
UCP212-37	2-5/16	2-3/4	9-1/2	7-1/4	2-3/4	25/32	29/32	63/64	5-7/16	3-1/2	2.5630	1.000	5/8	UC212-37		4.95
UCP212-38	2-3/8													UC212-38		4.88
UCP212-39	2-7/16													UC212-39		1.81
UCP213	65	76.2	265	203	70	25	28	27	150	89	65.1	25.4	M20	UC213	P213	5.15
UCP213-40	2-1/2	3	10-7/16	8	2-3/4	63/64	1-3/32	1-1/16	5-29/32	3-1/2	2.5630	1.000	3/4	UC213-40		5.24
UCP213-41	2-9/16													UC213-41		5.15
UCP214	70	79.4	266	210	72	25	28	27	156		74.6	30.2	M20	UC214	P214	6.20
UCP214-42	2-5/8													UC214-42		6.41
UCP214-43	2-11/16	3-1/8	10-15/32	8-17/64	2-27/32	63/64	1-3/32	1-1/16	6-9/64		2.9370	1.189	3/4	UC214-43		6.31
UCP214-44	2-3/4													UC214-44		6.21
UCP215	75	82.6	275	217	74	25	28	28	162		77.8	33.3	M20	UC215	P215	7.16
UCP215-45	2-13/16													UC215-45		7.41
UCP215-46	2-7/8	3-1/4	10-53/64	8-35/64	2-29/32	63/64	1-3/32	1-3/32	6-3/8		3.0630	1.311	3/4	UC215-46		7.30
UCP215-47	2-15/16													UC215-47		7.19
UCP215-48	3													UC215-48		7.07
UCP216	80	88.9	292	232	78	25	28	30	174		82.6	33.3	M20	UC216	P216	8.10
UCP216-49	3-1/16													UC216-49		8.28
UCP216-50	3-1/8	3-1/2	11-1/2	9-1/8	3-1/16	63/64	1-3/32	1-3/16	6-27/32		3.2520	1.311	3/4	UC216-50		8.15
UCP216-51	3-3/16													UC216-51		8.02
UCP217	85	95.2	310	247	83	25	28	32	185		85.7	34.1	M20	UC217	P217	9.81
UCP217-52	3-1/4													UC217-52		10.03
UCP217-53	3-5/16	3-3/4	12-13/64	9-23/32	3-17/64	63/64	1-3/32	1-1/4	7-9/32		3.3740	1.343	3/4	UC217-53		9.89
UCP217-55	3-7/16													UC217-55		9.60
UCP218	90	101.6	327	262	88	27	30	33	198		96	39.7	M22	UC218	P218	11.96
UCP218-56	3-1/2	4	12-7/8	10-5/16	3-15/32	1-1/16	1-3/16	1-19/64	7-51/64		3.7795	1.5630	7/8	UC218-56		12.07

HCP 2 (Normal-duty)

Pillow Blocks

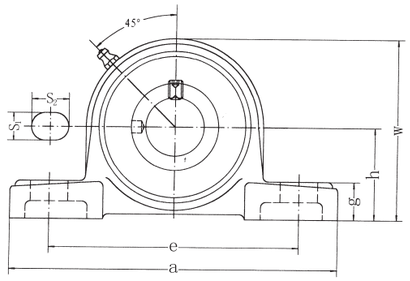

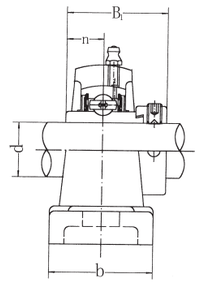

Unit No.	Dimensions mm / in. d	h	a	e	b	s_1	s_2	g	w	B_1	n	Bolt Size mm / inch	Bearing No.	Housing No.	Weight (kg)
HCP204	20	33.3	127	95	38	13	19	14	65	43.7	17.1	M10	HC204	P204	0.73
HCP204-12	3/4	1-5/16	5	3-3/4	1-1/2	1/2	3/4	9/16	2-9/16	1.720	0.673	3/8	HC204-12		0.73
HCP205	25	36.5	140	105	38	13	19	15	71	44.4	17.5	M10	HC205	P205	0.88
HCP205-13	13/16												HC205-13		0.93
HCP205-14	7/8	1-7/16	5-1/2	4-1/8	1-1/2	1/2	3/4	19/32	2-25/32	1.748	0.689	3/8	HC205-14		0.92
HCP205-15	15/16												HC205-15		0.90
HCP205-16	1												HC205-16		0.88
HCP206	30	42.9	160	121	44	17	20	17	84	48.4	18.3	M14	HC206	P206	1.37
HCP206-17	1-1/16												HC206-17		1.42
HCP206-18	1-1/8	1-11/16	6-19/64	4-3/4	1-47/64	43/64	25/32	21/32	3-5/16	1.906	0.720	1/2	HC206-18		1.39
HCP206-19	1-3/16												HC206-19		1.37
HCP206-20	1-1/4												HC206-20		1.34
HCP207	35	47.6	167	127	48	17	20	18	93	51.1	18.8	M14	HC207	P207	1.70
HCP207-20	1-1/4												HC207-20		1.77
HCP207-21	1-5/16	1-7/8	6-9/16	5	1-7/8	43/64	25/32	45/64	3-21/32	2.012	0.740	1/2	HC207-21		1.73
HCP207-22	1-3/8												HC207-22		1.70
HCP207-23	1-7/16												HC208-23		1.67
HCP208	40	49.2	184	137	54	17	20	18	100	56.3	21.4	M14	HC208	P208	2.04
HCP208-24	1-1/2	1-15/16	7-1/4	5-13/32	2-1/8	43/64	25/32	45/64	3-15/16	2.217	0.843	1/2	HC208–24		2.09
HCP208-25	1-9/16												HC208-25		2.05
HCP209	45	54.0	190	146	54	17	20	20	106	56.3	21.4	M14	HC209	P209	2.31
HCP209-26	1-5/8												HC209-26		2.42
HCP209-27	1-11/16	2-1/8	7-15/32	5-3/4	2-1/8	43/64	25/32	25/32	4-11/64	2.217	0.843	1/2	HC209-27		2.37
HCP209-28	1-3/4												HC209-28		2.33
HCP210	50	57.2	206	159	60	20	23	21	113	62.7	24.6	M16	HC210	P210	2.85
HCP210-29	1-13/16												HC210-29		3.00
HCP210-30	1-7/8	2-1/4	8-1/8	6-1/4	2-3/8	25/32	29/32	53/64	4-29/64	2.469	0.969	5/8	HC210-30		2.94
HCP210-31	1-15/16												HC210-31		2.88
HCP210-32	2												HC210-32		2.82
HCP211	55	63.5	219	171	60	20	23	23	125	71.4	27.8	M16	HC211	P211	3.52
HCP211-32	2												HC211-32		3.72
HCP211-33	2-1/16	2-1/2	8-5/8	6-47/64	2-3/8	25/32	29/32	29/32	4-59/64	2.811	1.094	5/8	HC211-33		3.64
HCP211-34	2-1/8												HC211-34		3.57
HCP211-35	2-3/16												HC211-35		3.49
HCP212	60	69.8	241	184	70	20	23	25	138	77.8	31	M16	HC212	P212	5.24
HCP212-36	2-1/4												HC212-36		5.40
HCP212-37	2-5/16	2-3/4	9-1/2	7-1/4	2-3/4	25/32	29/32	63/64	5-7/16	3.063	1.220	5/8	HC212-37		5.31
HCP212-38	2-3/8												HC212-38		5.26
HCP212-39	2-7/16												HC212-39		5.13
HCP213	65	76.2	265	203	70	25	28	27	150	85.7	34.1	M20	HC213	P213	5.71
HCP213–40	2-1/2	3	10-7/16	8	2-3/4	63/64	1-3/32	1-1/16	5-29/32	3.374	1.343	3/4	HC213-40		5.81
HCP213-41	2-9/16												HC213-41		5.70
HCP214	70	79.4	266	210	72	25	28	27	156	85.7	34.1	M20	HC214	P214	6.70
HCP214-42	2-3/8												HC214-42		6.94
HCP214-43	2-11/16	3-1/8	10-15/32	8-17/64	2-27/32	63/64	1-3/32	1-1/16	6-9/64	3.374	1.343	3/4	HC214-43		6.83
HCP214-44	2-3/4												HC214-44		6.71
HCP215	75	82.6	275	217	74	25	28	28	162	92.1	37.3	M20	HC215	P215	7.79
HCP215-45	2-13/16												HC215-45		8.09
HCP215-46	2-7/8	3-1/4	10-53/64	8-35/64	2-29/32	63/64	1-3/32	1-3/32	6-3/8	3.626	1.426	3/4	HC215-46		7.96
HCP215-47	2-15/16												HC215-47		7.83
HCP215-48	3												HC215-48		7.69

Pillow Blocks

UCLP2(Normal-duty)

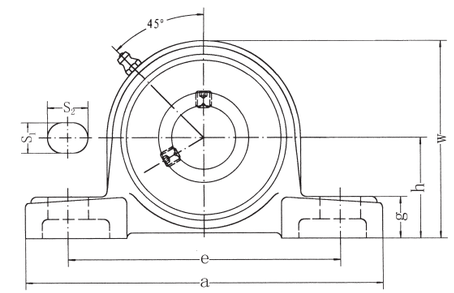

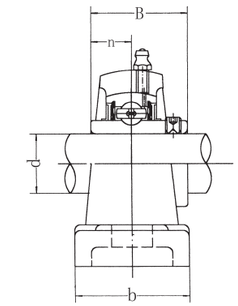

Unit No.	Dimensions mm / in. d	h	a	e	b	s_1	s_2	g	w	B	n	Bolt Size mm / inch	Bearing No.	Housing No.	Weight (kg)
UCLP201	12	31.75	127	95	38	13	16	14	64	31	12.7	M10	UC201	LP204	0.69
UCLP201-8	1/2	1-1/4	5	3-3/4	1-1/2	1/2	5/8	9/16	2-33/64	1.2205	0.500	3/8	UC201-8		0.69
UCLP202	15	31.75	127	95	38	13	16	14	64	31	12.7	M10	UC202	LP204	0.69
UCLP202-9	9/16	1-1/4	5	3-3/4	1-1/2	1/2	5/8	9/16	2-33/64	1.2205	0.500	3/8	UC202-9		0.69
UCLP202-10	5/8												UC202-10		0.69
UCLP203	17	31.75	127	95	38	13	16	14	64	31	12.7	M10	UC203	LP204	0.68
UCLP203-11	11/16	1-1/4	5	3-3/4	1-1/2	1/2	5/8	9/16	2-33/64	1.2205	0.500	3/8	UC203-11		0.67
UCLP204	20	31.75	127	95	38	13	16	14	64	31	12.7	M10	UC204	LP204	0.66
UCLP204-12	3/4	1-1/4	5	3-3/4	1-1/2	1/2	5/8	9/16	2-33/64	1.2205	0.500	3/8	UC204-12		0.66
UCLP205	25	33.34	140	105	38	13	16	15	68	34.1	14.3	M10	UC205	LP205	0.81
UCLP205-13	13/16												UC205-13		0.85
UCLP205-14	7/8	1-5/16	5-1/2	4-1/8	1-1/2	1/2	5/8	19/32	2-43/64	1.3425	0.563	3/8	UC205-14		0.83
UCLP205-15	15/16												UC205-15		0.82
UCLP205-16	1												UC205-16		0.81
UCLP206	30	39.69	160	121	44	17	20	17	80	38.1	15.9	M14	UC206	LP206	1.24
UCLP206-17	1-1/16												UC206-17		1.27
UCLP206-18	1-1/8	1-9/16	6-19/64	4-3/4	1-47/64	43/64	25/32	21/32	3-5/32	1.5000	0.626	1/2	UC206-18		1.26
UCLP206-19	1-3/16												UC206-19		1.24
UCLP206-20	1-1/4												UC206-20		1.23
UCLP207	35	46.04	167	127	48	17	20	18	91	42.9	17.5	M14	UC207	LP207	1.58
UCLP207-20	1-1/4												UC207-20		1.64
UCLP207-21	1-5/16	1-13/16	6-9/16	5	1-7/8	43/64	25/32	45/64	3-37/64	1.6890	0.689	1/2	UC207-21		1.61
UCLP207-22	1-3/8												UC207-22		1.58
UCLP207-23	1-7/16												UC207-23		1.55
UCLP208	40	49.2	184	137	54	17	20	18	100	49.2	19	M14	UC208	LP208	1.89
UCLP208-24	1-1/2	1-15/16	7-1/4	5-13/32	2-1/8	43/64	25/32	45/64	3-15/16	1.9370	0.748	1/2	UC208-24		1.93
UCLP208-25	1-9/16												UC208-25		1.90
UCLP209	45	52.39	190	146	54	17	20	20	104	49.2	19	M14	UC209	LP209	2.14
UCLP209-26	1-5/8												UC209-26		2.24
UCLP209-27	1-11/16	2-1/16	7-15/32	5-3/4	2-1/8	43/64	25/32	25/32	4-3/32	1.9370	0.748	1/2	UC209-27		2.20
UCLP209-28	1-3/4												UC209-28		2.14
UCLP210	50	55.56	206	159	60	20	23	21	112	51.6	19	M16	UC210	LP210	2.66
UCLP210-29	1-13/16												UC210-29		2.78
UCLP210-30	1-7/8	2-3/16	8-1/8	6-1/4	2-3/8	25/32	29/32	53/64	4-13/32	2.0315	0.748	5/8	UC210-30		2.73
UCLP210-31	1-15/16												UC210-31		2.68
UCLP210-32	2												UC210-32		2.64
UCLP211	55	61.91	219	171	60	20	23	23	124	55.6	22.2	M16	UC211	LP211	3.31
UCLP211-32	2												UC211-32		3.46
UCLP211-33	2-1/16	2-7/16	8-5/8	6-47/64	2-3/8	25/32	29/32	29/32	4-7/8	2.1890	0.874	5/8	UC211-33		3.40
UCLP211-34	2-1/8												UC211-34		3.35
UCLP211-35	2-3/16												UC211-35		3.29
UCLP212	60	68.26	241	184	70	20	23	25	136	65.1	25.4	M16	UC212	LP212	4.90
UCLP212-36	2-1/4												UC212-36		5.03
UCLP212-37	2-5/16	2-11/16	9-1/2	7-1/4	2-3/4	25/32	29/32	63/64	5-23/64	2.5630	1.000	5/8	UC212-37		4.95
UCLP212-38	2-3/8												UC212-38		4.88
UCLP212-39	2-7/16												UC212-39		4.81

UKP2 (Normal-duty)

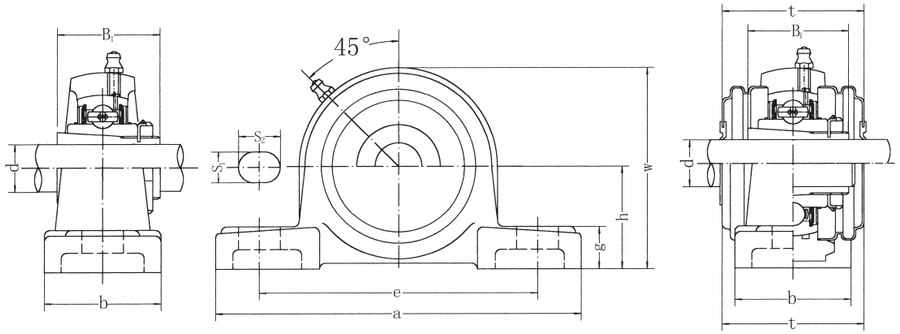

UKP-C1(D1)

Unit No.	Dimensions mm / in. d	h	a	e	b	s_1	s_2	g	w	t	B_1	Bolt Size mm / inch	Bearing No.	Housing No.	Weight (kg)
UKP205;H2305	20	36.5	140	105	38	13	19	15	71	48	35	M10	UK205;H2305	P205	0.86
UKP205;HE2305	3/4	1-7/16	5-1/2	4-1/8	1-1/2	1/2	3/4	19/32	2-25/32	1-57/64	1.378	3/8	UK205;HE2305		
UKP206;H2306	25	42.9	160	121	44	17	20	17	84	53	38	M14	UK206;H2306	P206	1.28
UKP206;HS2306	7/8	1-11/16	6-19/64	4-3/4	1-47/64	43/64	25/32	43/64	3-5/16	2-5/64	1.496	1/2	UK206;HS2306		
UKP206;HE2306	1												UK206;HE2306		
UKP207;H2307	30	47.6	167	127	48	17	20	18	93	59.5	43	M14	UK207;H2307	P207	1.67
UKP207;HS2307	1-1/8	1-7/8	6-9/16	5	1-7/8	43/64	25/32	45/64	3-21/32	2-11/32	1.693	1/2	UK207;HS2307		
UKP208;H2308	35	49.2	184	137	54	17	20	18	100	69	46	M14	UK208;H2308	P208	1.99
UKP208;HE2308	1-1/4	1-15/16	7-1/4	5-13/32	2-1/8	43/64	25/32	45/64	3-15/16	2-23/32	1.811	1/2	UK208;HE2308		
UKP208;HS2308	1-3/8												UK208;HS2308		
UKP209;H2309	40	54.0	190	146	54	17	20	20	106	69	50	M14	UK209;H2309	P209	2.29
UKP209;HA2309	1-7/16												UK209;HA2309		
UKP209;HE2309	1-1/2	2-1/8	7-15/32	5-3/4	2-1/8	43/64	25/32	25/32	4-11/64	2-23/32	1.969	1/2	UK209;HE2309		
UKP209;HS2309	1-5/8												UK209;HS2309		
UKP210;H2310	45	57.2	206	159	60	20	23	21	113	74.5	55	M16	UK210;H2310	P210	2.83
UKP210;HS2310	1-5/8												UK210;HS2310		
UKP210;HA2310	1-11/16	2-1/4	8-1/8	6-1/4	2-3/8	25/32	29/32	53/64	4-29/64	2-15/16	2.165	5/8	UK210;HA2310		
UKP210;HE2310	1-3/4												UK210;HE2310		
UKP211;H2311	50	63.5	219	171	60	20	23	23	125	76	59	M16	UK211;H2311	P211	3.46
UKP211;HS2311	1-7/8												UK211;HS2311		
UKP211;HA2311	1-15/16	2-1/2	8-5/8	6-47/64	2-3/8	25/32	29/32	29/32	4-59/64	3	2.323	5/8	UK211;HA2311		
UKP211;HE2311	2												UK211;HE2311		
UKP212;H2312	55	69.8	241	184	70	20	23	25	138	89	62	M16	UK212;H2312	P212	4.95
UKP212;HS2312	2-1/8	2-3/4	9-1/2	7-1/4	2-3/4	25/32	29/32	63/64	5-7/16	3-1/2	2.441	5/8	UK212;HS2312		
UKP213;H2313	60	76.2	265	203	70	25	28	27	150	89	65	M20	UK213;H2313	P213	5.06
UKP213;HA2313	2-3/16												UK213;HA2313		
UKP213;HE2313	2-1/4	3	10-7/16	8	2-3/4	63/64	1-3/32	1-1/16	5-29/32	3-1/2	2.559	3/4	UK213;HE2313		
UKP213;HS2313	2-3/8												UK213;HS2313		
UKP215;H2315	65	82.6	275	217	74	25	28	28	162		73	M20	UK215;H2315	P215	7.27
UKP215;HA2315	2-7/16	3-1/4	10-53/64	8-35/64	2-29/32	63/64	1-3/32	1-3/32	6-3/8		2.874	3/4	UK215;HA2315		
UKP215;HE2315	2-1/2												UK215;HE2315		
UKP216;H2316	70	88.9	292	232	78	25	28	30	174		78	M20	UK216;H2316	P216	8.36
UKP216;HA2316	2-11/16	3-1/2	11-1/2	9-1/8	3-1/16	63/64	1-3/32	1-3/16	6-27/32		3.071	3/4	UK216;HA2316		
UKP216;HE2316	2-3/4												UK216;HE2316		
UKP217;H2317	75	95.2	310	247	83	25	28	32	185		82	M20	UK217;H2317	P217	10.23
UKP217;HA2317	2-15/16	3-3/4	12-13/64	9-23/32	3-17/64	63/64	1-3/32	1-1/4	7-9/32		3.228	3/4	UK217;HA2317		
UKP217;HE2317	3												UK217;HE2317		
UKP218;H2318	80	101.6	327	262	88	27	30	33	198		86	M22	UK218;H2318	P218	12.34
UKP218;HA2318	3-3/16	4	12-7/8	10-5/16	3-15/32	1-1/16	1-3/16	1-19/64	7-51/64		3.386	7/8	UK218;HA2318		

Pillow Blocks

UCAK2 (Normal-duty)

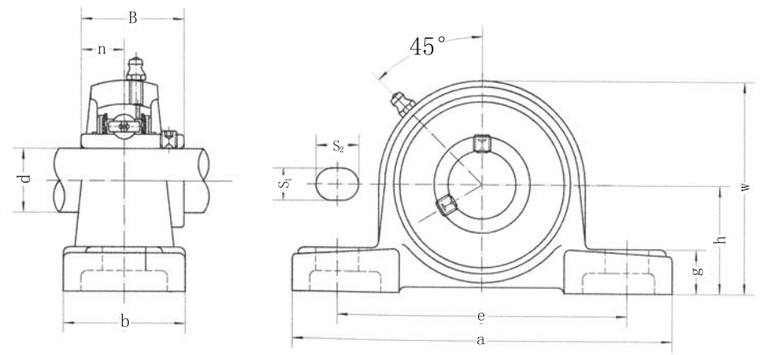

Unit No.	Dimensions mm / in. d	h	a	e	b	S_1	S_2	g	w	B	n	Bolt Size mm / inch	Bearing No.	Housing No.	Weight (kg)
UCAK204	20	31.75	133	98	41	13	16	14	64	31	12.7	M10	UC204	AK204	0.76
UCAK204-12	3/4	1-1/4	5-15/64	3-55/64	1-5/8	1/2	5/8	9/16	2-33/64	1.2205	0.500	3/8	UC204-12		0.76
UCAK205	25	33.34	140	105	44	13	16	16	68	34.1	14.3	M10	UC205	AK205	0.94
UCAK205-13	13/16												UC205-13		0.98
UCAK205-14	7/8												UC205-14		0.96
UCAK205-15	15/16	1-5/16	5-33/64	4-9/64	1-47/64	1/2	5/8	5/8	2-43/64	1.3425	0.563	3/8	UC205-15		0.95
UCAK205-16	1												UC205-16		0.94
UCAK206	30	39.69	160	121	48	15	19	17	80	38.1	15.9	M12	UC206	AK206	1.31
UCAK206-17	1-1/16												UC206-17		1.34
UCAK206-18	1-1/8												UC206-18		1.33
UCAK206-19	1-3/16	1-9/16	6-19/64	4-49/64	1-57/64	19/32	3/4	43/64	3-5/32	1.5000	0.626	7/16	UC206-19		1.31
UCAK206-20	1-1/4												UC206-20		1.30
UCAK207	35	46.04	167	127	48	15	19	19	92	42.9	17.5	M12	UC207	AK207	1.72
UCAK207-20	1-1/4												UC207-20		1.78
UCAK207-21	1-5/16												UC207-21		1.75
UCAK207-22	1-3/8	1-13/16	6-37/64	5	1-57/64	19/32	3/4	3/4	3-5/8	1.6890	0.689	7/16	UC207-22		1.72
UCAK207-23	1-7/16												UC207-23		1.69
UCAK208	40	49.2	181	140	54	15	19	19	100	49.2	19	M12	UC208	AK209	2.09
UCAK208-24	1-1/2												UC208-24		2.13
UCAK208-25	1-9/16	1-15/16	7-1/8	5-33/64	2-1/8	19/32	3/4	3/4	3-15/16	1.9370	0.748	7/16	UC208-25		2.10
UCAK209	45	52.39	190	146	54	15	19	21	106	49.2	19	M12	UC209	AK209	2.42
UCAK209-26	1-5/8												UC209-26		2.52
UCAK209-27	1-11/16	2-1/16	7-15/32	5-3/4	2-1/8	19/32	3/4	53/64	4-11/64	1.9370	0.748	7/16	UC209-27		2.48
UCAK209-28	1-3/4												UC209-28		2.42
UCAK210	50	55.56	203	159	57	15	19	22	113	51.6	19	M12	UC210	AK210	2.90
UCAK210-29	1-13/16												UC210-29		3.02
UCAK210-30	1-7/8	2-3/16	8	6-17/64	2-1/4	19/32	3/4	7/8	4-29/64	2.0315	0.748	7/16	UC210-30		2.97
UCAK210-31	1-15/16												UC210-31		2.92
UCAK210-32	2												UC210-32		2.88
UCAK211	55	61.9	232	181	60	19	24	25	125	55.6	22.2	M16	UC211	AK211	3.78
UCAK211-32	2												UC211-32		3.93
UCAK211-33	2-1/16	2-1/4	9-9/64	7-1/8	2-23/64	3/4	15/16	63/64	4-59/64	2.1890	0.874	5/8	UC211-33		3.87
UCAK211-34	2-1/8												UC211-34		3.82
UCAK211-35	2-3/16												UC211-35		3.76
UCAK212	60	68.3	241	190	64	19	24	29	137	65.1	25.4	M16	UC212	AK212	5.16
UCAK212-36	2-1/4												UC212-36		5.29
UCAK212-37	2-5/16	2-11/16	9-31/64	7-31/64	2-33/64	3/4	15/16	1-9/64	5-25/64	2.5630	1.000	5/8	UC212-37		5.21
UCAK212-38	2-3/8												UC212-38		5.14
UCAK212-39	2-7/16												UC212-39		5.07

UCPK2 (Normal-duty)

Pillow Blocks

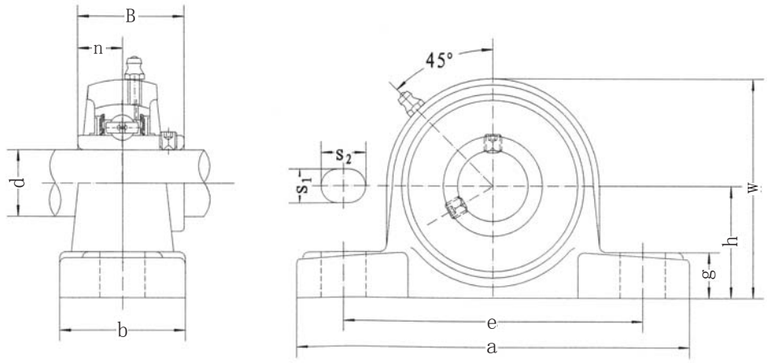

Unit No.	Dimensions mm / in.											Bolt Size mm / inch	Bearing No.	Housing No.	Weight (kg)
	d	h	a	e	b	S_1	S_2	g	w	B	n				
UCPK204	20	31.75	127	98	38	11	14	14	63	31	12.7	M10	UC204	PK204	0.70
UCPK204-12	3/4	1-1/4	5	3-55/64	1-1/2	7/16	9/16	9/16	2-31/64	1.2205	0.500	3/8	UC204-12		0.70
UCPK205	25	33.34	140	105	38	11	14	15	68	34.1	14.3	M10	UC205	PK205	0.87
UCPK205-13	13/16												UC205-13		0.91
UCPK205-14	7/8												UC205-14		0.89
UCPK205-15	15/16	1-5/16	5-33/64	4-9/64	1-1/2	7/16	9/16	19/32	2-43/64	1.3425	0.563	3/8	UC205-15		0.88
UCPK205-16	1												UC205-16		0.87
UCPK206	30	39.69	160	121	44	14	19	17	80	38.1	15.9	M12	UC206	PK206	1.28
UCPK206-17	1-1/16												UC206-17		1.31
UCPK206-18	1-1/8												UC206-18		1.30
UCPK206-19	1-3/16	1-9/16	6-19/64	4-49/64	1-47/64	9/16	3/4	43/64	3-5/32	1.5000	0.626	7/16	UC206-19		1.28
UCPK206-20	1-1/4												UC206-20		1.27
UCPK207	35	46.04	167	127	48	14	19	18	91	42.9	17.5	M12	UC207	PK207	1.72
UCPK207-20	1-1/4												UC207-20		1.78
UCPK207-21	1-5/16												UC207-21		1.75
UCPK207-22	1-3/8	1-13/16	6-37/64	5	1-57/64	9/16	3/4	45/64	3-37/64	1.6890	0.689	7/16	UC207-22		1.72
UCPK207-23	1-7/16												UC207-23		1.69
UCPK208	40	49.2	181	140	52	14	19	18	100	49.2	19	M12	UC208	PK209	2.04
UCPK208-24	1-1/2												UC208-24		2.08
UCPK208-25	1-9/16	1-15/16	7-1/8	5-33/64	2-3/64	9/16	3/4	45/64	3-15/16	1.9370	0.748	7/16	UC208-25		2.05
UCPK209	45	52.39	189	146	54	14	19	20	104	49.2	19	M12	UC209	PK209	2.33
UCPK209-26	1-5/8												UC209-26		2.43
UCPK209-27	1-11/16	2-1/16	7-7/16	5-3/4	2-1/8	9/16	3/4	25/32	4-3/32	1.9370	0.748	7/16	UC209-27		2.39
UCPK209-28	1-3/4												UC209-28		2.33
UCPK210	50	55.56	203	159	57	14	19	21	112	51.6	19	M12	UC210	PK210	2.87
UCPK210-29	1-13/16												UC210-29		3.98
UCPK210-30	1-7/8	2-3/16	8	6-17/64	2-1/4	9/16	3/4	53/64	4-13/32	2.0315	0.748	7/16	UC210-30		2.94
UCPK210-31	1-15/16												UC210-31		2.89
UCPK210-32	2												UC210-32		2.85
UCPK211	55	61.9	232	181	60	18	24	23	124	55.6	22.2	M14	UC211	PK211	3.69
UCPK211-32	2												UC211-32		3.84
UCPK211-33	2-1/16	2-1/4	9-9/64	7-1/8	2-23/64	45/64	15/16	29/32	4-7/8	2.1890	0.874	1/2	UC211-33		3.78
UCPK211-34	2-1/8												UC211-34		3.73
UCPK211-35	2-3/16												UC211-35		3.67
UCPK212	60	68.3	241	191	64	18	24	25	136	65.1	25.4	M14	UC212	PK212	5.17
UCPK212-36	2-1/4												UC212-36		5.20
UCPK212-37	2-5/16	2-11/16	9-31/64	7-33/64	2-33/64	45/64	15/16	63/64	5-23/64	2.5630	1.000	1/2	UC212-37		5.22
UCPK212-38	2-3/8												UC212-38		5.15
UCPK212-39	2-7/16												UC212-39		5.07
UCPK213	65	68.26	248	194	70	18	29	27	141	65.1	25.4	M14	UC213	PK213	5.02
UCPK213-40	2-1/2												UC213-40		5.11
UCPK213-41	2-9/16	2-11/16	9-49/64	7-41/64	2-3/4	45/64	1-9/64	1-1/16	5-9/16	2.5630	1.000	1/2	UC213-41		5.02

Pillow Blocks

UCPE2 (Normal-duty)

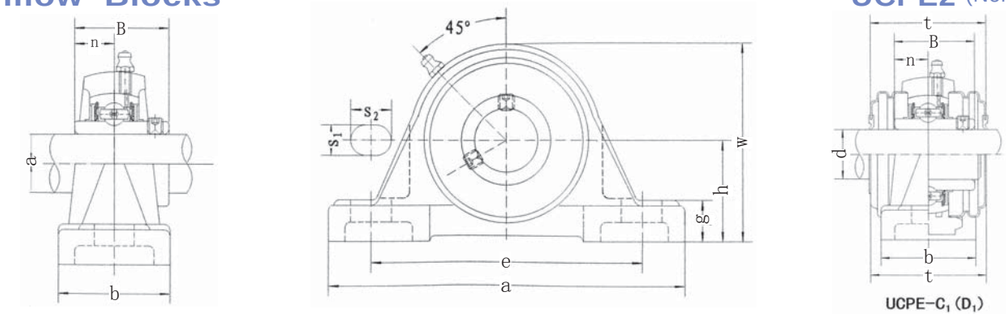

Unit No.	Dimensions mm / in.												Bolt Size mm / inch	Bearing No.	Housing No.	Weight (kg)
	d	h	a	e	b	S_1	S_2	g	w	t	B	n				
UCPE201	12	33.3	127	95	38	13	19	14	65	44.5	31	12.7	M10	UC201	PE204	0.93
UCPE201-8	1/2	1-5/16	5	3-3/4	1-1/2	1/2	3/4	9/16	2-9/16	1-3/4	1.2205	0.500	3/8	UC201-8		0.93
UCPE202	15	33.3	127	95	38	13	19	14	65	44.5	31	12.7	M10	UC202	PE204	0.93
UCPE202-9	9/16	1-5/16	5	3-3/4	1-1/2	1/2	3/4	9/16	2-9/16	1-3/4	1.2205	0.500	3/8	UC202-9		0.93
UCPE202-10	5/8													UC202-10		0.93
UCPE203	17	33.3	127	95	38	13	19	14	65	44.5	31	12.7	M10	UC203	PE204	0.92
UCPE203-11	11/16	1-5/16	5	3-3/4	1-1/2	1/2	3/4	9/16	2-9/16	1-3/4	1.2205	0.500	3/8	UC203-11		0.91
UCPE204	20	33.3	127	95	38	13	19	14	65	44.5	31	12.7	M10	UC204	PE204	0.76
UCPE204-12	3/4	1-5/16	5	3-3/4	1-1/2	1/2	3/4	9/16	2-9/16	1-3/4	1.2205	0.500	3/8	UC204-12		0.76
UCPE205	25	36.5	140	105	38	13	19	15	71	48	34.1	14.3	M10	UC205	PE205	0.94
UCPE205-13	13/16													UC205-13		0.98
UCPE205-14	7/8	1-7/16	5-1/2	4-1/8	1-1/2	1/2	3/4	19/32	2-25/32	1-57/64	1.3425	0.563	3/8	UC205-14		0.96
UCPE205-15	15/16													UC205-15		0.95
UCPE205-16	1													UC205-16		0.94
UCPE206	30	42.9	160	121	44	17	20	17	84	53	38.1	15.9	M14	UC206	PE206	1.41
UCPE206-17	1-1/16													UC206-17		1.44
UCPE206-18	1-1/8	1-11/16	6-19/64	4-3/4	1-47/64	43/64	25/32	21/32	3-5/16	2-5/64	1.5000	0.626	1/2	UC206-18		1.43
UCPE206-19	1-3/16													UC206-19		1.41
UCPE206-20	1-1/4													UC206-20		1.40
UCPE207	35	47.6	167	127	48	17	20	18	93	59.5	42.9	17.5	M14	UC207	PE207	1.84
UCPE207-20	1-1/4													UC207-20		1.90
UCPE207-21	1-5/16	1-7/8	6-9/16	5	1-7/8	43/64	25/32	45/64	3-21/32	2-11/32	1.6890	0.689	1/2	UC207-21		1.87
UCPE207-22	1-3/8													UC207-22		1.84
UCPE207-23	1-7/16													UC207-23		1.81
UCPE208	40	49.2	184	137	54	17	20	18	100	69	49.2	19	M14	UC208	PE208	2.20
UCPE208-24	1-1/2	1-15/16	7-1/4	5-13/32	2-1/8	43/64	25/32	45/64	3-15/16	2-23/32	1.9370	0.748	1/2	UC208-24		2.24
UCPE208-25	1-9/16													UC208-25		2.21
UCPE209	45	54.0	190	146	54	17	20	20	106	69	49.2	19	M14	UC209	PE209	2.52
UCPE209-26	1-5/8													UC209-26		2.62
UCPE209-27	1-11/16	2-1/8	7-15/32	5-3/4	2-1/8	43/64	25/32	25/32	4-11/64	2-23/32	1.9370	0.748	1/2	UC209-27		2.58
UCPE209-28	1-3/4													UC209-28		2.52
UCPE210	50	57.2	206	159	60	20	23	21	113	74.5	51.6	19	M16	UC210	PE210	3.10
UCPE210-29	1-13/16													UC210-29		3.22
UCPE210-30	1-7/8	2-1/4	8-1/8	6-1/4	2-3/8	25/32	29/32	53/64	4-29/64	2-15/16	2.0315	0.748	5/8	UC210-30		3.17
UCPE210-31	1-15/16													UC210-31		3.12
UCPE210-32	2													UC210-32		3-08
UCPE211	55	63.5	219	171	60	20	23	23	125	76	55.6	22.2	M16	UC211	PE211	3.81
UCPE211-32	2													UC211-32		3.96
UCPE211-33	2-1/16	2-1/2	8-5/8	6-47/64	2-3/8	25/32	29/32	29/32	4-59/64	3	2.1890	0.874	5/8	UC211-33		3.90
UCPE211-34	2-1/8													UC211-34		3.85
UCPE211-35	2-3/16													UC211-35		3.79
UCPE212	60	69.8	241	184	70	20	23	25	138	89	65.1	25.4	M16	UC212	PE212	5.71
UCPE212-36	2-1/4													UC212-36		5.84
UCPE212-37	2-5/16	2-3/4	9-1/2	7-1/4	2-3/4	25/32	29/32	63/64	5-7/16	3-1/2	2.5630	1.000	5/8	UC212-37		5.76
UCPE212-38	2-3/8													UC212-38		5.69
UCPE212-39	2-7/16													UC212-39		5.62
UCPE213	65	76.2	265	203	70	25	28	27	150	89	65.1	25.4	M20	UC213	PE213	6.02
UCPE213-40	2-1/2	3	10-7/16	8	2-3/4	63/64	1-3/32	1-1/16	5-29/32	3-1/2	2.5630	1.000	3/4	UC213-40		6.11
UCPE213-41	2-9/16													UC213-41		6.02
UCPE214	70	79.4	266	210	72	25	28	27	156		74.6	30.2	M20	UC214	PE214	7.17
UCPE214-42	2-5/8													UC214-42		7.38
UCPE214-43	2-11/16	3-1/8	10-15/32	8-17/64	2-27/32	63/64	1-3/32	1-1/16	6-9/64		2.9370	1.189	3/4	UC214-43		7.28
UCPE214-44	2-3/4													UC214-44		7.18
UCPE215	75	82.6	275	217	74	25	28	28	162		77.8	33.3	M20	UC215	PE215	8.27
UCPE215-45	2-13/16													UC215-45		8.52
UCPE215-46	2-7/8	3-1/4	10-53/64	8-35/64	2-29/32	63/64	1-3/32	1-3/32	6-3/8		3.0630	1.311	3/4	UC215-46		8.41
UCPE215-47	2-15/16													UC215-47		8.30
UCPE215-48	3													UC215-48		8.18
UCPE216	80	88.9	292	232	78	25	28	30	174		82.6	33.3	M20	UC216	PE216	9.46
UCPE216-49	3-1/16													UC216-49		9.64
UCPE216-50	3-1/8	3-1/2	11-1/2	9-1/8	3-1/16	63/64	1-3/32	1-3/16	6-27/32		3.2520	1.311	3/4	UC216-50		9.51
UCPE216-51	3-3/16													UC216-51		9.38
UCPE217	85	95.2	310	247	83	25	28	32	185		85.7	34.1	M20	UC217	PE217	11.48
UCPE217-52	3-1/4													UC217-52		11.7
UCPE217-53	3-5/16	3-3/4	12-13/64	9-23/32	3-17/64	63/64	1-3/32	1-1/4	7-9/32		3.3740	1.343	3/4	UC217-53		11.56
UCPE217-55	3-7/16													UC217-55		11.27
UCPE218	90	101.6	327	262	88	27	30	33	198		96	39.7	M22	UC218	PE218	13.96
UCPE218-56	3-1/2	4	12-7/8	10-5/16	3-15/32	1-1/16	1-3/16	1-19/64	7-51/64		3.7795	1.563	7/8	UC218-56		14.07

UCASE2 (Normal-duty)

Pillow Blocks

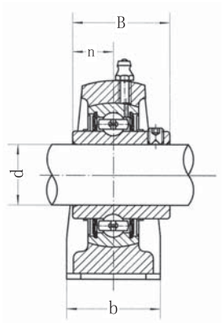

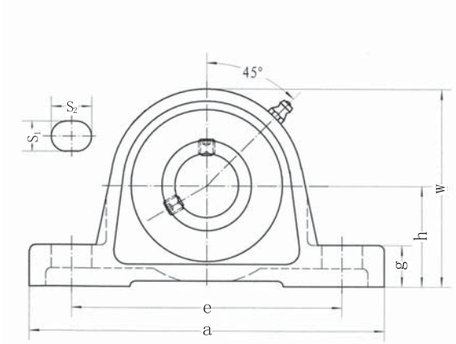

Unit No.	Dimensions mm / in.											Bolt Size inch	Bearing No.	Housing No.	Weight (kg)
	d	h	a	e	b	S_1	S_2	g	w	B	n				
UCASE201	12	30.2	125	95	30	11	19	10	57	27.4	11.5	3/8	UCS201	ASE03	0.49
UCASE202	15	1-3/16	4-59/64	3-3/4	1-3/16	7/16	3/4	25/64	2-1/4	1.0787	0.4527		UCS202		
UCASE203	17												UCS203		
UCASE204	20	33.3 1-5/16	130 5-1/8	97 3-13/16	32 1-17/64	11 7/16	19 3/4	14.5 37/64	64 2-33/64	31 1.2205	12.7 0.500	3/8	UC204	ASE04	0.55
UCASE205	25	36.5 1-7/16	130 5-1/8	103 4-1/16	36 1-27/64	11 7/16	19 3/4	14.5 37/64	70 2-3/4	34.1 1.3425	14.3 0.563	3/8	UC205	ASE05	0.65
UCASE206	30	42.9 1-11/16	158 6-7/32	118 4-41/64	40 1-37/64	14 35/64	22 55/64	17 43/64	82 3-15/64	38.1 1.5000	15.9 0.626	7/16	UC206	ASE06	1.05
UCASE207	35	47.6 1-7/8	163 6-27/64	126 4-61/64	45 1-49/64	14 35/64	21 53/64	19 3/4	93 3-21/32	42.9 1.6890	17.5 0.689	7/16	UC207	ASE07	1.53
UCASE208	40	49.2 1-15/16	179 7-3/64	138 5-7/16	48 1-57/64	14 35/64	26 1-1/32	19 3/4	99 3-57/64	49.2 1.9370	19 0.748	7/16	UC208	ASE08	1.73
UCASE209	45	54.0 2-1/8	192 7-9/16	150 5-29/32	48 1-57/64	14 35/64	29 1-9/64	21.5 27/32	107 4-7/32	49.2 1.9370	19 0.748	7/16	UC209	ASE09	2.08
UCASE210	50	57.2 2-1/4	200 7-7/8	158 6-7/32	54 2-1/8	18 45/64	23 29/32	21.5 27/32	115 4-17/32	51.6 2.0315	19 0.748	5/8	UC210	ASE10	2.50
UCASE211	55	63.5 2-1/2	222 8-47/64	176 6-59/64	60 2-23/64	18 45/64	30 1-3/16	22.5 57/64	124.5 4-29/32	55.6 2.1890	22.2 0.874	5/8	UC211	ASE11	3.09
UCASE212	60	69.9 2-3/4	240 9-29/64	190 7-31/64	60 2-23/64	18 45/64	28 1-7/64	25 63/64	140 5-33/64	65.1 2.5630	25.4 1.000	5/8	UC212	ASE12	4.49
UCASE213	65	76.2 3	257 10-1/8	200 7-7/8	64 2-33/64	25 63/64	35 1-3/8	27 1-1/16	150 5-29/32	65.1 2.5630	25.4 1.000	7/8	UC213	ASE13	5.75
UCASE214	70	79.4 3-1/8	260 10-15/64	203 8	65 2-9/16	22 55/64	28 1-7/64	27.5 1-5/64	156 6-9/64	74.6 2.9370	30.2 1.189	3/4	UC214	ASE14	5.95
UCASE215	75	82.5 3-1/4	265 10-7/16	210 8-17/64	66 2-19/32	22 55/64	30 1-3/16	27.5 1-5/64	164 6-29/64	77.8 3.0630	33.3 1.311	3/4	UC215	ASE15	7.21
UCASE216	80	89.0 3-1/2	290 11-27/64	232 9-1/8	78 3-1/16	26 1-1/32	34 1-11/32	30 1-3/16	175 6-57/64	82.6 3.2520	33.3 1.311	7/8	UC216	ASE16	8.50
UCASE218	90	101.6 4	330 12-31/32	268 10-35/64	85 3-11/32	27 1-1/16	35 1-3/8	35 1-3/8	200 7-7/8	96 3.7795	39.7 1.563	7/8	UC218	ASE18	12.76

Pillow Blocks

UCCP2 (Normal-duty)

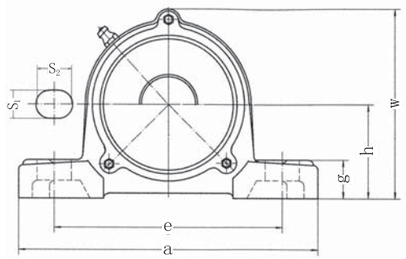

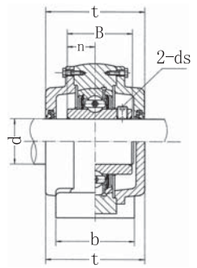

Unit No.	Dimensions mm / in.											Bolt Size mm / inch	Bearing No.	Housing No.	Weight (kg)
	d	h	a	e	b	S_1	S_2	g	w	t	B	n			
UCCP204	20	33.3	127	95	38	13	19	14	69	62	31	12.7	M10	UC204	CP204	0.82
UCCP204-12	3/4	1-5/16	5	3-3/4	1-1/2	1/2	3/4	9/16	2-23/32	2-7/16	1.2205	0.500	3/8	UC204-12		0.82
UCCP205	25	36.5	140	105	38	13	19	15	76	70	34.1	14.3	M10	UC205	CP205	1.11
UCCP205-13	13/16													UC205-13		1.15
UCCP205-14	7/8	1-7/16	5-1/2	4-1/8	1-1/2	1/2	3/4	19/32	2-63/64	2-3/4	1.3425	0.563	3/8	UC205-14		1.14
UCCP205-15	15/16													UC205-15		1.12
UCCP205-16	1													UC205-16		1.11
UCCP206	30	42.9	160	121	44	17	20	17	87	74	38.1	15.9	M14	UC206	CP206	1.64
UCCP206-17	1-1/16													UC206-17		1.65
UCCP206-18	1-1/8	1-11/16	6-19/64	4-3/4	1-47/64	43/64	25/32	21/32	3-27/64	2-29/32	1.5000	0.626	1/2	UC206-18		1.66
UCCP206-19	1-3/16													UC206-19		1.64
UCCP206-20	1-1/4													UC206-20		1.63
UCCP207	35	47.6	167	127	48	17	20	18	97	80	42.9	17.5	M14	UC207	CP207	2.09
UCCP207-20	1-1/4													UC207-20		2.15
UCCP207-21	1-5/16	1-7/8	6-9/16	5	1-7/8	43/64	25/32	45/64	3-13/16	3-5/32	1.6890	0.689	1/2	UC207-21		2.12
UCCP207-22	1-3/8													UC207-22		2.09
UCCP207-23	1-7/16													UC207-23		2.06
UCCP208	40	49.2	184	137	54	17	20	18	104	90	49.2	19	M14	UC208	CP208	2.61
UCCP208-24	1-1/2	1-15/16	7-1/4	5-13/32	2-1/8	43/64	25/32	45/64	4-3/32	3-35/64	1.9370	0.748	1/2	UC208-24		2.65
UCCP208-25	1-9/16													UC208-25		2.62
UCCP209	45	54.0	190	146	54	17	20	20	114	90	49.2	19	M14	UC209	CP209	2.80
UCCP209-26	1-5/8													UC209-26		2.90
UCCP209-27	1-11/16	2-1/8	7-15/32	5-3/4	2-1/8	43/64	25/32	25/32	4-31/64	3-35/64	1.9370	0.748	1/2	UC209-27		2.86
UCCP209-28	1-3/4													UC209-28		2.82
UCCP210	50	57.2	206	159	60	20	23	21	120	98	51.6	19	M16	UC210	CP210	3.26
UCCP210-29	1-13/16													UC210-29		3.38
UCCP210-30	1-7/8	2-1/4	8-1/8	6-1/4	2-3/8	25/32	29/32	53/64	4-23/32	3-55/64	2.0315	0.748	5/8	UC210-30		3.33
UCCP210-31	1-15/16													UC210-31		3.28
UCCP210-32	2													UC210-32		3.24
UCCP211	55	63.5	219	171	60	20	23	23	133	100	55.6	22.2	M16	UC211	CP211	4.27
UCCP211-32	2													UC211-32		4.42
UCCP211-33	2-1/16	2-1/2	8-5/8	6-47/64	2-3/8	25/32	29/32	29/32	5-15/64	3-15/16	2.1890	0.874	5/8	UC211-33		4.36
UCCP211-34	2-1/8													UC211-34		4.31
UCCP211-35	2-3/16													UC211-35		4.25
UCCP212	60	69.8	241	184	70	20	23	25	145	114	65.1	25.4	M16	UC212	CP212	5.77
UCCP212-36	2-1/4													UC212-36		5.90
UCCP212-37	2-5/16	2-3/4	9-1/2	7-1/4	2-3/4	25/32	29/32	63/64	5-45/64	4-31/64	2.5630	1.000	5/8	UC212-37		5.82
UCCP212-38	2-3/8													UC212-38		5.75
UCCP212-39	2-7/16													UC212-39		5.68
UCCP213	65	76.2	265	203	70	25	28	27	156	118	65.1	25.4	M20	UC213	CP213	6.98
UCCP213-40	2-1/2	3	10-7/16	8	2-3/4	63/64	1-3/32	1-1/16	6-9/64	4-41/64	2.5630	1.000	3/4	UC213-40		7.07
UCCP213-41	2-9/16													UC213-41		6.98
UCCP214	70	79.4	266	210	72	25	28	27	162	134	74.6	30.2	M20	UC214	CP214	7.60
UCCP214-42	2-5/8													UC214-42		7.81
UCCP214-43	2-11/16	3-1/8	10-15/32	8-17/64	2-27/32	63/64	1-3/32	1-1/16	6-3/8	5-9/32	2.9370	1.189	3/4	UC214-43		7.71
UCCP214-44	2-3/4													UC214-44		7.61
UCCP215	75	82.6	275	217	74	25	28	28	167	136	77.8	33.3	M20	UC215	CP215	8.31
UCCP215-45	2-13/16													UC215-45		8.56
UCCP215-46	2-7/8													UC215-46		8.44
UCCP215-47	2-15/16	3-1/4	10-53/64	8-35/64	2-29/32	63/64	1-3/32	1-3/32	6-37/64	5-23/64	3.0630	1.311	3/4	UC215-47		8.33
UCCP215-48	3													UC215-48		8.21
UCCP216	80	88.9	292	232	78	25	28	30	188	146	82.6	33.3	M20	UC216	CP216	10.70
UCCP216-49	3-1/16													UC216-49		10.88
UCCP216-50	3-1/8	3-1/2	11-1/2	9-1/8	3-1/16	63/64	1-3/32	1-3/16	7-13/32	5-3/4	3.2520	1.311	3/4	UC216-50		10.75
UCCP216-51	3-3/16													UC216-51		10.62
UCCP217	85	95.2	310	247	83	25	28	32	199	150	85.7	34.1	M20	UC217	CP217	13.86
UCCP217-52	3-1/4													UC217-52		14.08
UCCP217-53	3-5/16	3-3/4	12-13/64	9-23/32	3-17/64	63/64	1-3/32	1-1/4	7-53/64	5-29/32	3.3740	1.343	3/4	UC217-53		13.94
UCCP217-55	3-7/16													UC217-55		13.65
UCCP218	90	101.6	327	262	88	27	30	33	211	164	96	39.7	M22	UC218	CP218	16.06
UCCP218-56	3-1/2	4	12-7/8	10-5/16	3-15/32	1-1/16	1-3/16	1-19/64	8-5/16	6-29/64	3.7795	1.563	7/8	UC218-56		16.17

UCPX (Medium-duty)

Pillow Blocks

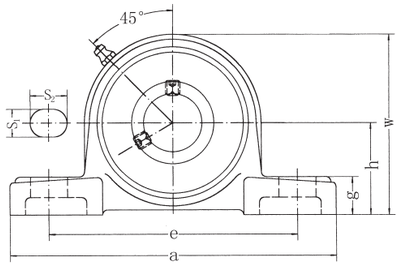

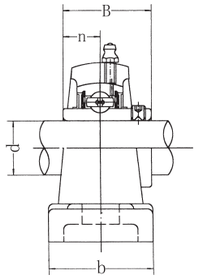

Unit No.	Dimensions mm in. d	h	a	e	b	s_1	s_2	g	w	B	n	Bolt Size mm inch	Bearing No.	Housing No.	Weight (kg)
UCPX05	25	44.4	159	119	51	17	20	18	85	38.1	15.9	M14	UCX05	PX05	1.5
UCPX05-13	13/16												UCX05-13		
UCPX05-14	7/8	1-3/4	6-1/4	4-11/16	2	43/64	25/32	23/32	3-11/32	1.5000	0.626	1/2	UCX05-14		
UCPX05-15	15/16												UCX05-15		
UCPX05-16	1												UCX05-16		
UCPX06	30	47.6	175	127	57	17	20	20	93	42.9	17.5	M14	UCX06	PX06	2.0
UCPX06-17	1-1/16												UCX06-17		
UCPX06-18	1-1/8	1-7/8	6-7/8	5	2-1/4	43/64	25/32	25/32	3-21/32	1.6890	0.689	1/2	UCX06-18		
UCPX06-19	1-3/16												UCX06-19		
UCPX06-20	1-1/4												UCX06-20		
UCPX07	35	54.0	203	144	57	17	20	21	105	49.2	19	M14	UCX07	PX07	2.6
UCPX07-21	1-5/16												UCX07-21		
UCPX07-22	1-3/8	2-1/8	8	5-21/32	2-1/4	43/64	25/32	13/16	4-1/8	1.9370	0.748	1/2	UCX07-22		
UCPX07-23	1-7/16												UCX07-23		
UCPX08	40	58.7	222	156	67	20	23	26	111	49.2	19	M16	UCX08	PX08	3.3
UCPX08-24	1-1/2	2-5/16	8-3/4	6-5/32	2-5/8	25/32	29/32	1-1/32	4-3/8	1.9370	0.748	5/8	UCX08-24		
UCPX08-25	1-9/16												UCX08-25		
UCPX09	45	58.7	222	156	67	20	23	26	116	51.6	19	M16	UCX09	PX09	3.3
UCPX09-26	1-5/8												UCX09-26		
UCPX09-27	1-11/16	2-5/16	8-3/4	6-5/32	2-5/8	25/32	29/32	1-1/32	4-9/16	2.0315	0.748	5/8	UCX09-27		
UCPX09-28	1-3/4												UCX09-28		
UCPX09-29	1-13/16												UCX09-29		
UCPX10	50	63.5	241	171	73	20	23	27	126	55.6	22.2	M16	UCX10	PX10	4.3
UCPX10-30	1-7/8												UCX10-30		
UCPX10-31	1-15/16	2-1/2	9-1/2	6-47/64	2-7/8	25/32	29/32	1-1/16	4-31/32	2.1890	0.874	5/8	UCX10-31		
UCPX10-32	2												UCX10-32		
UCPX11	55	69.8	260	184	79	25	28	30	137	65.1	25.4	M20	UCX11	PX11	5.7
UCPX11-33	2-1/16												UCX11-33		
UCPX11-34	2-1/8												UCX11-34		
UCPX11-35	2-3/16	2-3/4	10-1/4	7-1/4	3-1/8	31/32	1-3/32	1-3/16	5-13/32	2.5630	1.000	3/4	UCX11-35		
UCPX11-36	2-1/4												UCX11-36		
UCPX11-37	2-5/16												UCX11-37		
UCPX12	60	76.2	286	203	83	25	28	33	151	65.1	25.4	M20	UCX12	PX12	7.3
UCPX12-38	2-3/8												UCX12-38		
UCPX12-39	2-7/16	3	11-1/4	8	3-9/32	31/32	1-3/32	1-5/16	5-15/16	2.5630	1.000	3/4	UCX12-39		
UCPX13	65	76.2	286	203	83	25	28	33	154	74.6	30.2	M20	UCX13	PX13	7.6
UCPX13-40	2-1/2												UCX13-40		
UCPX13-41	2-9/16	3	11-1/4	8	3-9/32	63/64	1-3/32	1-5/16	6-1/16	2.9370	1.189	3/4	UCX13-41		
UCPX14	70	88.9	330	229	89	27	30	35	170	77.8	33.3	M22	UCX14	PX14	9.9
UCPX14-42	2-5/8												UCX14-42		
UCPX14-43	2-11/16	3-1/2	13	9-1/32	3-1/2	1-1/16	1-3/16	1-3/8	6-11/16	3.0630	1.311	7/8	UCX14-43		
UCPX14-44	2-3/4												UCX14-44		
UCPX15	75	88.9	330	229	89	27	30	35	175	82.6	33.3	M22	UCX15	PX15	11
UCPX15-45	2-13/16												UCX15-45		
UCPX15-46	2-7/8	3-1/2	13	9-1/32	3-1/2	1-1/16	1-3/16	1-3/8	6-7/8	3.2520	1.311	7/8	UCX15-46		
UCPX15-47	2-15/16												UCX15-47		
UCPX15-48	3												UCX15-48		
UCPX16	80	101.6	381	283	102	27	30	40	194	85.7	34.1	M22	UCX16	PX16	15
UCPX16-49	3-1/16												UCX16-49		
UCPX16-50	3-1/8	4	15	11-5/32	4-1/32	1-1/16	1-3/16	1-9/16	7-5/8	3.3740	1.343	7/8	UCX16-50		
UCPX16-51	3-3/16												UCX16-51		
UCPX16-52	3-1/4												UCX16-52		
UCPX17	85	101.6	381	283	102	27	30	40	200	96	39.7	M22	UCX17	PX17	16
UCPX17-53	3-5/16	4	15	11-5/32	4-1/32	1-1/16	1-3/16	1-9/16	7-7/8	3.7795	1.563	7/8	UCX17-53		
UCPX17-55	3-7/16												UCX17-55		
UCPX18	90	101.6	381	283	111	27	30	40	206	104.0	42.9	M22	UCX18	PX18	17
UCPX18-56	3-1/2	4	15	11-5/32	4-3/8	1-1/16	1-3/16	1-37/64	8-7/64	4.0945	1.6890	7/8	UCX18-56		
UCPX20	100	127.0	432	337	121	33	36	45	244	117.5	49.2	M27	UCX20	PX20	30
UCPX20-64	4	5	17	13-9/32	4-3/4	1-5/16	1-27/64	1-25/32	9-39/64	4.6260	1.9370	1	UCX20-64		

Pillow Blocks
(with adapter mounted)

UKPX (Medium-duty)

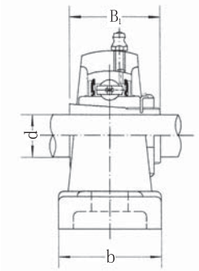

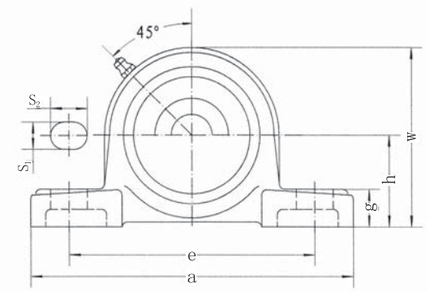

Unit No.	Dimensions mm in. d	h	a	e	b	s_1	s_2	g	w	B_1	Bolt Size mm inch	Bearing NO.	Housing NO.	Weight (kg)
UKPX05;H2305	20	44.4	159	119	51	17	20	18	85	35	M14	UKX05;H2305	PX05	1.5
UKPX05;HE2305	3/4	1-3/4	6-1/4	4-11/16	2	43/64	25/32	23/32	3-11/32	1.378	1/2	UKX05;HE2305		
UKPX06;H2306	25	47.6	175	127	57	17	20	20	93	38	M14	UKX06;H2306	PX06	2.1
UKPX06;HS2306	7/8	1-7/8	6-7/8	5	2-1/4	43/64	25/32	25/32	3-21/32	1.496	1/2	UKX06;HS2306		
UKPX06;HE2306	1											UKX06;HE2306		
UKPX07;H2307	30	54.0	203	144	57	17	20	21	105	43	M14	UKX07;H2307	PX07	2.7
UKPX07;HS2307	1-1/8	2-1/8	8	5-21/32	2-1/4	43/64	23/32	13/16	4-1/8	1.693	1/2	UKX07;HS2307		
UKPX08;H2308	35	58.7	222	156	67	20	23	26	111	46	M16	UKX08;H2308	PX08	3.5
UKPX08;HE2308	1-1/4	2-5/16	8-3/4	6-5/32	2-5/8	25/32	29/32	1-1/32	4-3/8	1.811	5/8	UKX08;HE2308		
UKPX08;HS2308	1-3/8											UKX08;HS2308		
UKPX09;H2309	40	58.7	222	156	67	20	23	26	116	50	M16	UKX09;H2309	PX09	3.7
UKPX09;HA2309	1-7/16											UKX09;HA2309		
UKPX09;HE2309	1-1/2	2-5/16	8-3/4	6-5/32	2-5/8	25/32	29/32	1-1/32	4-9/16	1.969	5/8	UKX09;HE2309		
UKPX09;HS2309	1-5/8											UKX09;HS2309		
UKPX10;H2310	45	63.5	241	171	73	20	23	27	126	55	M16	UKX10;H2310	PX10	4.6
UKPX10;HS2310	1-5/8											UKX10;HS2310		
UKPX10;HA2310	1-11/16	2-1/2	9-1/2	6-47/64	2-7/8	25/32	29/32	1-1/16	4-31/32	2.165	5/8	UKX10;HA2310		
UKPX10;HE2310	1-3/4											UKX10;HE2310		
UKPX11;H2311	50	69.8	260	184	79	25	28	30	137	59	M20	UKX11;H2311	PX11	6.2
UKPX11;HS2311	1-7/8											UKX11;HS2311		
UKPX11;HA2311	1-15/16	2-3/4	10-1/4	7-1/4	3-1/8	31/32	1-3/32	1-3/16	5-13/32	2.323	3/4	UKX11;HA2311		
UKPX11;HE2311	2											UKX11;HE2311		
UKPX12;H2312	55	76.2	286	203	83	25	28	33	151	62	M20	UKX12;H2312	PX12	7.5
UKPX12;HS2312	2-1/8	3	11-1/4	8	3-9/32	63/64	1-3/32	1-5/16	5-15/16	2.441	3/4	UKX12;HS2312		
UKPX13;H2313	60	76.2	286	203	83	25	28	33	154	65	M20	UKX13;H2313	PX13	7.8
UKPX13;HA2313	2-3/16											UKX13;HA2313		
UKPX13;HE2313	2-1/4	3	11-1/4	8	3-9/32	63/64	1-3/32	1-5/16	6-1/16	2.559	3/4	UKX13;HE2313		
UKPX13;HS2313	2-3/8											UKX13;HS2313		
UKPX15;H2315	65	88.9	330	229	89	27	30	35	175	73	M22	UKX15;H2315	PX15	10.5
UKPX15;HA2315	2-7/16	3-1/2	13	9-1/32	3-1/2	1-1/16	1-3/16	1-3/8	6-7/8	2.874	7/8	UKX15;HA2315		
UKPX15;HS2315	2-1/2											UKX15;HS2315		
UKPX16;H2316	70	101.6	381	283	102	27	30	40	194	78	M22	UKX16;H2316	PX16	15.4
UKPX16;HA2316	2-11/16	4	15	11-5/32	4-1/32	1-1/16	1-3/16	1-9/16	7-5/8	3.071	7/8	UKX16;HA2316		
UKPX16;HS2316	2-3/4											UKX16;HS2316		
UKPX17;H2317	75	101.6	381	283	102	27	30	40	200	82	M22	UKX17;H2317	PX17	15.8
UKPX17;HA2317	2-15/16	4	15	11-5/32	4-1/32	1-1/16	1-3/16	1-9/16	7-7/8	3.228	7/8	UKX17;HA2317		
UKPX17;HE2317	3											UKX17;HE2317		
UKPX18;H2318	80	101.6	381	283	111	27	30	40	206	86	M22	UKX18;H2318	PX18	18.6
UKPX18;HA2318	3-3/16	4	15	11-5/32	4-3/8	1-1/16	1-3/16	1-9/16	8-1/8	3.386	7/8	UKX18;HA2318		
UKPX20;H2320	90	127.0	432	337	121	33	36	45	244	97	M27	UKX20;H2320	PX20	29.3
UKPX20;HA2320	3-1/2	5	17	13-9/32	4-3/4	1-5/16	1-13/32	1-25/32	9-5/8	3.814	1	UKX20;HA2320		

UCP3 (Heavy-duty)

Pillow Blocks

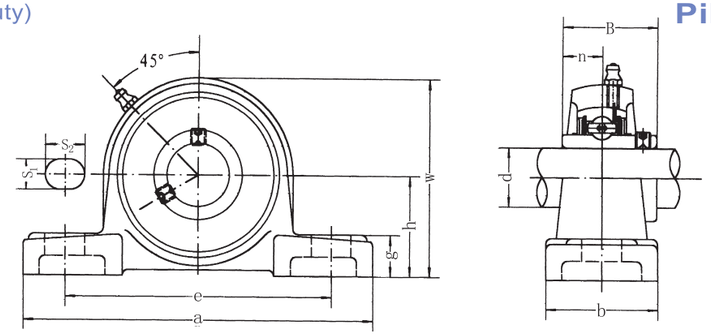

Unit No.	Dimensions mm / inch											Bolt Size mm / inch	Bearing No.	Housing No.	Weight (kg)
	d	h	a	e	b	S_1	S_2	g	w	B	n				
UCP305	25	45	175	132	45	17	20	15	85	38	38	M14	UC305	P305	1.4
UCP305-13	13/16	1-49/64	6-7/8	5-3/16	1-25/32	43/64	25/32	19/32	3-11/32	1.4961	0.591	1/2	UC305-13		
UCP305-14	7/8												UC305-14		
UCP305-15	15/16												UC305-15		
UCP305-16	1												UC305-16		
UCP306	30	50	180	140	50	17	20	18	95	43	17	M14	UC306	P306	1.8
UCP306-17	1-1/16												UC306-17		
UCP306-18	1-1/8	1-31/32	7-3/32	5-1/2	1-31/32	43/64	25/32	23/32	3-3/4	1.6929	0.669	1/2	UC306-18		
UCP306-19	1-3/16												UC306-19		
UCP307	35	56	210	160	56	17	25	20	106	48	19	M14	UC307	P307	2.8
UCP307-20	1-1/4												UC307-20		
UCP307-21	1-5/16	1-13/64	8-9/32	6-5/16	2-13/64	43/64	31/32	25/32	4-3/16	1.8898	0.748	1/2	UC307-21		
UCP307-22	1-3/8												UC307-22		
UCP307-23	1-7/16												UC307-23		
UCP308	40	60	220	170	60	17	27	22	116	52	19	M14	UC308	P308	3.0
UCP308-24	1-1/2	2-23/64	8-21/32	6-11/16	2-3/8	43/64	1-11/16	7/8	4-9/16	2.0472	0.748	1/2	UC308-24		
UCP308-25	1-9/16												UC308-25		
UCP309	45	67	245	190	67	20	30	24	129	57	22	M16	UC309	P309	4.1
UCP309-26	1-5/8	2-41/64	9-21/32	7-15/32	2-5/8	25/32	1-3/16	15/16	5-3/32	2.2441	0.866	5/8	UC309-26		
UCP309-27	1-11/16												UC309-27		
UCP309-28	1-3/4												UC309-28		
UCP310	50	75	275	212	75	20	35	27	143	61	22	M16	UC310	P310	5.8
UCP310-29	1-13/16												UC310-29		
UCP310-30	1-7/8	2-61/64	10-13/16	8-11/32	2-15/16	25/32	1-3/8	1-1/16	5-5/8	2.4016	0.866	5/8	UC310-30		
UCP310-31	1-15/16												UC310-31		
UCP311	55	80	310	236	80	20	38	30	154	66	25	M16	UC311	P311	7.4
UCP311-32	2												UC311-32		
UCP311-33	2-1/16	3-5/32	12-7/32	9-9/32	3-5/32	25/32	1-1/2	1-3/16	6-1/16	2.5984	0.984	5/8	UC311-33		
UCP311-34	2-1/8												UC311-34		
UCP311-35	2-3/16												UC311-35		
UCP312	60	85	330	250	85	25	38	32	165	71	26	M20	UC312	P312	9.4
UCP312-36	2-1/4												UC312-36		
UCP312-37	2-5/16	3-11/32	13	9-17/32	3-11/32	31/32	1-1/2	1-1/4	6-1/2	2.7953	1.024	3/4	UC312-37		
UCP312-38	2-3/8												UC312-38		
UCP312-39	2-7/16												UC312-39		
UCP313	65	90	340	260	90	25	38	33	176	75	30	M20	UC313	P313	10
UCP313-40	2-1/2	3-35/64	13-3/8	10-1/4	3-17/32	31/32	1-1/2	1-5/16	6-15/16	2.9528	1.181	3/4	UC313-40		
UCP313-41	2-9/16												UC313-41		
UCP314	70	95	360	280	90	27	40	35	187	78	33	M22	UC314	P314	12
UCP314-42	2-5/8												UC314-42		
UCP314-43	2-11/16	3-47/64	14-3/16	11-1/32	3-17/32	1-1/16	1-9/16	1-3/8	7-3/8	3.0708	1.299	7/8	UC314-43		
UCP314-44	2-3/4												UC314-44		
UCP315	75	100	380	290	100	27	40	35	198	82	32	M22	UC315	P315	14
UCP315-45	2-13/16												UC315-45		
UCP315-46	2-7/8	3-15/16	14-31/32	11-13/32	3-15/16	1-1/16	1-9/16	1-3/8	7-25/32	3.2283	1.260	7/8	UC315-46		
UCP315-47	2-15/16												UC315-47		
UCP315-48	3												UC315-48		
UCP316	80	106	400	300	110	27	40	40	210	86	34	M22	UC316	P316	18
UCP316-49	3-1/16												UC316-49		
UCP316-50	3-1/8	4-11/64	15-3/4	11-13/16	4-11/32	1-1/16	1-9/16	1-9/16	8-9/32	3.3858	1.339	7/8	UC316-50		
UCP316-51	3-3/16												UC316-51		
UCP317	85	112	420	320	110	33	45	40	220	96	40	M27	UC317	P317	20
UCP317-52	3-1/4												UC317-52		
UCP317-53	3-5/16	4-13/32	16-17/32	12-19/32	4-11/32	1-5/16	1-25/32	1-9/16	8-21/32	3.7795	1.575	1	UC317-53		
UCP317-55	3-7/16												UC317-55		
UCP318	90	118	430	330	110	33	45	45	235	96	40	M27	UC318	P318	24
UCP318-55	3-7/16	4-41/64	16-15/16	13	4-11/32	1-5/16	1-25/32	1-25/32	9-1/4	3.7795	1.575	1	UC318-55		
UCP318-56	3-1/2												UC318-56		
UCP319	95	125	470	360	120	36	50	45	250	103	41	M30	UC319	P319 P319	29
UCP319-58	3-5/8												UC319-58		
UCP319-59	3-11/16	4-59/64	18-1/2	14-3/16	4-23/32	1-13/32	1-31/32	1-25/32	9-27/32	4.0551	1.614	1-1/8	UC319-59		
UCP319-60	3-3/4												UC319-60		
UCP320	100	140	490	380	120	36	50	50	275	108	42	M30	UC320	P320	35.0
UCP320-64	4	5-33/64	19-9/32	14-31/32	4-23/32	1-13/32	1-31/32	1-31/32	10-53/64	4.252	1.6536	1-1/8	UC320-64		34.9
UCP322	110	150	520	400	140	40	55	55	300	117	46	M33	UC322	P322	45
		5-29/32	20-15/32	15-3/4	55-33/32	1-9/16	2-5/32	2-5/32	11-13/16	4.6063	1.8110				
UCP324	120	160	570	450	140	40	55	65	320	126	51	M33	UC324	P324	55
		6-19/64	22-7/16	17-23/32	5-33/64	1-9/16	2-5/32	2-21/32	12-19/32	4.9606	2.0079				
UCP326	130	180	600	480	140	40	55	75	355	135	54	M33	UC326	P326	72
		7-3/32	23-5/8	18-29/32	5-33/64	1-9/16	2-5/32	2-61/64	13-31/32	5.3150	2.1260				
UCP328	140	200	620	500	140	40	55	75	390	145	59	M33	UC328	P328	89
		7-7/8	24-13/32	19-11/16	5-33/64	1-9/16	2-5/32	2-61/64	15-32/64	5.7087	2.3228				

Pillow Blocks
(with adapter mounted)

UKP3 (Heavy-duty)

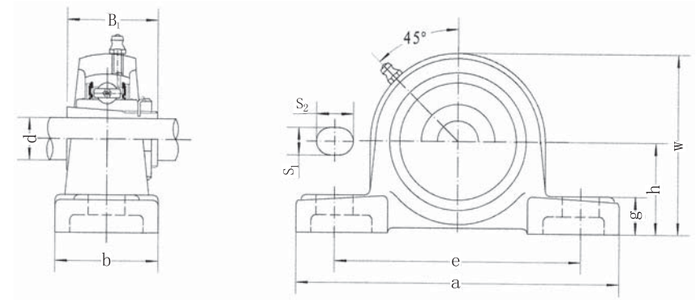

Unit No.	Dimensions mm / in.										Bolt Size mm / inch	Bearing No.	Housing No.	Weight (kg)
	d	h	a	e	b	s_1	s_2	g	w	B_1				
UKP305;H2305	20	45	175	132	45	17	20	15	85	35	M14	UK305;H2305	P305	1.7
UKP305;HE2305	3/4	1-49/64	6-7/8	5-3/16	1-3/4	43/64	19/32	25/32	3-11/32	1.378	1/2	UK305;HE2305		
UKP306;H2306	25	50	180	140	50	17	20	18	95	38	M14	UK306;H2306	P306	2.3
UKP306;HS2306	7/8	1-31/32	7-3/32	5-1/2	1-31/32	43/64	25/32	23/32	3-3/4	1.496		UK306;HS2306		
UKP306;HE2306	1										1/2	UK306;HE2306		
UKP307;H2307	30	56	210	160	56	17	25	20	106	43	M14	UK307;H2307	P307	3.0
UKP307;HS2307	1-1/8	2-13/64	8-9/32	6-5/16	2-7/32	43/64	63/64	25/32	4-3/16	1.693	1/2	UK307;HS2307		
UKP308;H2308	35	60	220	170	60	17	27	22	116	46	M16	UK308;H2308	P308	3.8
UKP308;HE2308	1-1/4	2-23/64	8-21/32	6-11/16	2-3/8	43/64	1-1/16	7/8	4-9/16	1.811	5/8	UK308;HE2308		
UKP308;HS2308	1-3/8											UK308;HS2308		
UKP309;H2309	40	67	245	190	67	20	30	24	129	50	M16	UK309;H2309	P309	5.0
UKP309;HA2309	1-7/16											UK309;HA2309		
UKP309;HE2309	1-1/2	1-41/64	9-21/32	7-15/32	2-5/8	25/32	1-3/16	15/16	5-3/32	1.969	5/8	UK309;HE2309		
UKP309;HS2309	1-5/8											UK309;HS2309		
UKP310;H2310	45	75	275	212	75	20	35	27	143	55	M16	UK310;H2310	P310	6.7
UKP310;HS2310	1-5/8											UK310;HS2310		
UKP310;HA2310	1-11/16	2-61/64	10-13/16	8-11/32	2-15/16	25/32	1-3/8	1-1/16	5-5/8	2.165	5/8	UK310;HA2310		
UKP310;HE2310	1-3/4											UK310;HE2310		
UKP311;H2311	50	80	310	236	80	20	38	30	154	59	M16	UK311;H2311	P311	8.1
UKP311;HS2311	1-7/8											UK311;HS2311		
UKP311;HA2311	1-15/16	3-5/32	12-7/32	9-9/32	3-5/32	25/32	1-1/2	1-3/16	6-1/16	2.323	5/8	UK311;HA2311		
UKP311;HE2311	2											UK311;HE2311		
UKP312;H2312	55	85	330	250	85	25	38	32	165	62	M20	UK312;H2312	P312	9.4
UKP312;HS2312	2-1/8	3-11/32	13	9-27/32	3-11/32	63/64	1-1/2	1-1/4	6-1/2	2.441	3/4	UK312;HS2312		
UKP313;H2313	60	90	340	260	90	25	38	33	176	65	M20	UK313;H2313	P313	10.8
UKP313;HA2313	2-3/16											UK313;HA2313		
UKP313;HE2313	2-1/4	3-35/64	13-3/8	10-1/4	3-17/32	63/64	1-1/2	1-5/16	6-15/16	2.559	3/4	UK313;HE2313		
UKP313;HS2313	2-3/8											UK313;HS2313		
UKP315;H2315	65	100	380	290	100	27	40	35	198	73	M22	UK315;H2315	P315	14.9
UKP315;HA2315	2-7/16	3-15/16	14-31/32	11-13/32	3-15/16	1-1/16	1-9/16	1-3/8	7-25/32	2.874	7/8	UK315;HA2315		
UKP315;HS2315	2-1/2											UK315;HS2315		
UKP316;H2316	70	106	400	300	110	27	40	40	210	78	M22	UK316;H2316	P316	18.6
UKP316;HA2316	2-11/16	4-11/64	15-3/4	11-13/16	4-11/32	1-1/16	1-9/16	1-9/16	8-9/32	3.071	7/8	UK316;HA2316		
UKP316;HE2316	2-3/4											UK316;HE2316		
UKP317;H2317	75	112	420	320	110	33	45	40	220	82	M27	UK317;H2317	P317	20.2
UKP317;HA2317	2-15/16	4-11/64	16-17/32	12-19/32	4-11/32	1-5/16	1-25/32	1-9/16	8-21/32	3.228	1	UK317;HA2317		
UKP317;HS2317	3											UK317;HS2317		
UKP318;H2318	80	118	430	330	110	33	45	45	235	86	M27	UK318;H2318	P318	22.8
UKP318;HA2318	3-3/16	4-41/64	16-15/16	13	4-11/32	1-5/16	1-25/32	1-25/32	9-1/4	3.386	1	UK318;HA2318		
UKP319;H2319	85	125	470	360	120	36	50	45	250	90	M30	UK319;H2319	P319	29.3
UKP319;HA2319	3-5/16	4-59/64	18-1/2	14-3/16	4-23/32	1-13/32	1-31/32	1-25/32	9-27/32	3.543	1-1/8	UK319;HA2319		
UKP320;H2320	90	140	490	380	120	36	50	50	275	97	M30	UK320;H2320	P320	34.8
UKP320;HA2320	3-7/16	5-33/64	19-9/32	14-31/32	4-23/32	1-13/32	1-31/32	1-31/32	10-53/64	3.814	1-1/8	UK320;HA2320		
UKP322;H2322	100	150	520	400	140	40	55	55	300	105	M33	UK322;H2322	P322	43.9
UKP322;HA2322	3-15/16	5-29/32	20-15/32	15-3/4	5-1/2	1-9/16	2-5/32	2-5/32	11-13/16	4.134	1-1/4	UK322;HA2322		
UKP324;H2324	110	160	570	450	140	40	55	65	320	112	M33	UK324;H2324	P324	55.7
UKP324;HA2324	4-3/16	6-19/64	22-7/16	17-23/32	5-1/2	1-9/16	2-5/32	1-21/32	12-19/32	4.410	1-1/4	UK324;HA2324		
UKP326;H2326	115	180	600	480	140	40	55	75	355	121	M33	UK326;H2326	P326	71.9
UKP326;HA2326	4-7/16	7-3/32	23-5/8	18-29/32	5-1/2	1-9/16	2-5/32	2-61/64	13-31/32	4.764	1-1/4	UK326;HA2326		
UKP328;H2328	125	200	620	500	140	40	55	75	390	131	M33	UK328;H2328	P328	92.5
UKP328;HA2328	4-15/16	7-7/8	24-13/32	19-11/16	5-1/2	1-9/16	2-5/32	2-61/64	15-32/64	5.158	1-1/4	UK328;HA2328		

UCF2 (Normal-duty)

Flange Units (Square)

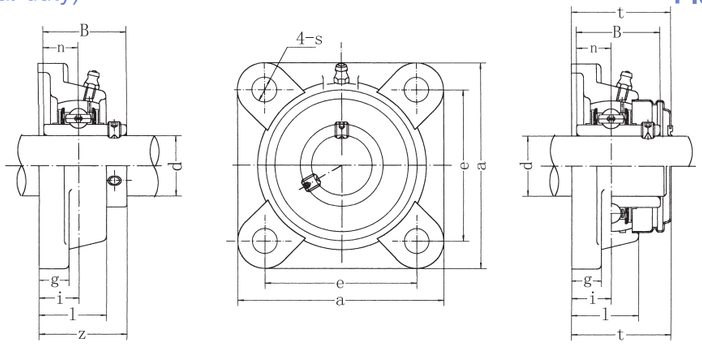

UCF-C1(D1)

Unit No.	Dimensions mm / in. d	a	e	i	g	l	s	z	t	B	n	Bolt Size mm / inch	Bearing No.	Housing No.	Weight (kg)
UCF201	12	86	64	15	12	25.5	12	33.3	37.5	31	12.7	M10	UC201	F204	0.60
UCF201-8	1/2	3-3/8	2-33/64	19/32	15/32	1	15/32	1-5/16	1-31/64	1.2205	0.500	3/8	UC201-8		0.59
UCF202	15	86	64	15	12	25.5	12	33.3	37.5	31	12.7	M10	UC202	F204	0.59
UCF202-9	9/16	3-3/8	2-33/64	19/32	15/32	1	15/32	1-5/16	1-31/64	1.2205	0.500	3/8	UC202-9		0.59
UCF202-10	5/8												UC202-10		0.59
UCF203	17	86	64	15	12	25.5	12	33.3	37.5	31	12.7	M10	UC203	F204	0.58
UCF203-11	11/16	3-3/8	2-33/64	19/32	15/32	1	15/32	1-5/16	1-31/64	1.2205	0.500	3/8	UC203-11		0.57
UCF204	20	86	64	15	12	25.5	12	33.3	37.5	31	12.7	M10	UC204	F204	0.56
UCF204-12	3/4	3-3/8	2-33/64	19/32	15/32	1	15/32	1-5/16	1-31/64	1.2205	0.500	3/8	UC204-12		0.56
UCF205	25	95	70	16	14	27	12	35.8	40	34.1	14.3	M10	UC205	F205	0.80
UCF205-13	13/16												UC205-13		0.84
UCF205-14	7/8	3-3/4	2-3/4	5/8	35/64	1-1/16	15/32	1-13/32	1-9/16	1.3425	0.563	3/8	UC205-14		0.83
UCF205-15	15/16												UC205-15		0.81
UCF205-16	1												UC205-16		0.80
UCF206	30	108	83	18	14	31	12	40.2	44.5	38.1	15.9	M10	UC206	F206	1.12
UCF206-17	1-1/16												UC206-17		1.15
UCF206-18	1-1/8	4-1/4	3-17/64	45/64	35/64	1-7/32	15/32	1-19/32	1-3/4	1.5000	0.626	3/8	UC206-18		1.14
UCF206-19	1-3/16												UC206-19		1.12
UCF206-20	1-1/4												UC206-20		1.11
UCF207	35	117	92	19	16	34	14	44.4	48.5	42.9	17.5	M12	UC207	F207	1.46
UCF207-20	1-1/4												UC207-20		1.52
UCF207-21	1-5/16	4-39/64	3-5/8	3/4	5/8	1-11/32	35/64	1-3/4	1-29/32	1.6890	0.689	7/16	UC207-21		1.49
UCF207-22	1-3/8												UC207-22		1.46
UCF207-23	1-7/16												UC207-23		1.43
UCF208	40	130	102	21	16	36	16	51.2	55.5	49.2	19	M14	UC208	F208	1.84
UCF208-24	1-1/2	5-1/8	4-1/64	53/64	5/8	1-27/64	5/8	2-1/64	2-3/16	1.9370	0.748	1/2	UC208-24		1.88
UCF208-25	1-9/16												UC208-25		1.85
UCF209	45	137	105	22	18	38	16	52.2	56.5	49.2	19	M14	UC209	F209	2.15
UCF209-26	1-5/8												UC209-26		2.25
UCF209-27	1-11/16	5-13/32	4-9/64	55/64	23/32	1-1/2	5/8	2-1/16	2-7/32	1.9370	0.748	1/2	UC209-27		2.21
UCF209-28	1-3/4												UC209-28		2.17
UCF210	50	143	111	22	18	40	16	54.6	59.5	51.6	19	M14	UC210	F210	2.42
UCF210-29	1-13/16												UC210-29		2.54
UCF210-30	1-7/8	5-5/8	4-3/8	55/64	23/32	1-9/16	5/8	2-5/32	2-11/32	2.0315	0.748	1/2	UC210-30		2.49
UCF210-31	1-15/16												UC210-31		2.44
UCF210-32	2												UC210-32		2.40
UCF211	55	162	130	25	20	43	19	58.4	63	55.6	22.2	M16	UC211	F211	3.31
UCF211-32	2												UC211-32		3.46
UCF211-33	2-1/16	6-3/8	5-1/8	63/64	25/32	1-11/16	3/4	2-5/16	2-31/64	2.1890	0.874	5/8	UC211-33		3.40
UCF211-34	2-1/8												UC211-34		3.35
UCF211-35	2-3/16												UC211-35		3.29
UCF212	60	175	143	29	20	48	19	68.7	73.5	65.1	25.4	M16	UC212	F212	4.28
UCF212-36	2-1/4												UC212-36		4.41
UCF212-37	2-5/16	6-57/64	5-5/8	1-9/64	25/32	1-57/64	3/4	2-45/64	2-57/64	2.5630	1.000	5/8	UC212-37		4.33
UCF212-38	2-3/8												UC212-38		4.26
UCF212-39	2-7/16												UC212-39		4.19
UCF213	65	187	149	30	22	50	19	69.7	74.5	65.1	25.4	M16	UC213	F213	4.99
UCF213-40	2-1/2	7-23/64	5-55/64	1-3/16	55/64	1-31/32	3/4	2-3/4	2-15/16	2.5630	1.000	5/8	UC213-40		5.08
UCF213-41	2-9/16												UC213-41		4.99
UCF214	70	193	152	31	22	54	19	75.4	81.5	74.6	30.2	M16	UC214	F214	5.85
UCF214-42	2-5/8												UC214-42		6.06
UCF214-43	2-11/16	7-19/32	5-63/64	1-7/32	55/64	2-1/8	3/4	2-31/32	3-13/64	2.9370	1.189	5/8	UC214-43		5.96
UCF214-44	2-3/4												UC214-44		5.86
UCF215	75	200	159	34	22	56	19	78.5	83.5	77.8	33.3	M16	UC215	F215	6.91
UCF215-45	2-13/16												UC215-45		7.16
UCF215-46	2-7/8	7-7/8	6-17/64	1-11/32	55/64	2-7/32	3/4	3-3/32	3-9/32	3.0630	1.311	5/8	UC215-46		7.05
UCF215-47	2-15/16												UC215-47		6.94
UCF215-48	3												UC215-48		6.82
UCF216	80	208	165	34	22	58	23	83.3	88.5	82.6	33.3	M20	UC216	F216	7.50
UCF216-49	3-1/16												UC216-49		7.68
UCF216-50	3-1/8	8-3/16	6-1/2	1-11/32	55/64	2-9/32	29/32	3-9/32	3-31/64	3.2520	1.311	3/4	UC216-50		7.55
UCF216-51	3-3/16												UC216-51		7.42
UCF217	85	220	175	36	24	63	23	87.6	92.6	85.7	34.1	M20	UC217	F217	9.66
UCF217-52	3-1/4												UC217-52		9.88
UCF217-53	3-5/16	8-21/23	6-57/64	1-27/64	15/16	2-15/32	29/32	3-7/16	3-41/64	3.3740	1.343	3/4	UC217-53		9.74
UCF217-55	3-7/16												UC217-55		9.45
UCF218	90	235	187	40	24	68	23	96.3	101.5	96	39.7	M20	UC218	F218	12.06
UCF218-56	3-1/2	9-1/4	7-23/64	1-37/64	15/16	2-11/16	29/32	3-25/32	4	3.7795	1.5630	3/4	UC218-56		12.17

Flange Units (Square)

HCF 2 (Normal-duty)

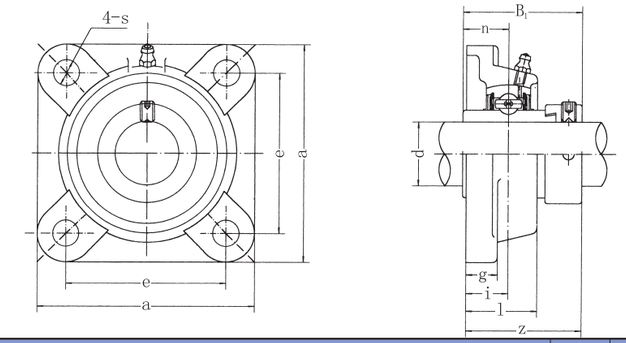

Unit No.	Dimensions mm / in. d	a	e	i	g	l	S	z	B1	n	Bolt Size mm / inch	Bearing No.	Housing No.	Weight (kg)
HCF204	20	86	64	15	12	25.5	12	41.6	43.7	17.1	M10	HC204	F204	0.63
HCF204-12	3/4	3-3/8	2-33/64	19/32	15/32	1	15/32	1-41/64	1.720	0.673	3/8	HC204-12		0.63
HCF205	25	95	70	16	14	27	12	42.9	44.4	17.5	M10	HC205	F205	0.87
HCF205-13	13/16											HC205-13		0.92
HCF205-14	7/8	3-3/4	2-3/4	5/8	35/64	1-1/16	15/32	1-11/16	1.748	0.689	3/8	HC205-14		0.91
HCF205-15	15/16											HC205-15		0.89
HCF205-16	1											HC205-16		0.87
HCF206	30	108	83	18	14	31	12	48.1	48.4	18.3	M10	HC206	F206	1.25
HCF206-17	1-1/16											HC206-17		1.30
HCF206-18	1-1/8	4-1/4	3-17/64	45/64	35/64	1-7/32	15/32	1-57/64	1.906	0.720	3/8	HC206-18		1.27
HCF206-19	1-3/16											HC206-19		1.25
HCF206-20	1-1/4											HC206-20		1.24
HCF207	35	117	92	19	16	34	14	51.3	51.1	18.8	M12	HC207	F207	1.58
HCF207-20	1-1/4											HC207-20		1.65
HCF207-21	1-5/16	4-39/64	3-5/8	3/4	5/8	1-11/32	35/64	2-1/64	2.012	0.740	7/16	HC207-21		1.61
HCF207-22	1-3/8											HC207-22		1.58
HCF207-23	1-7/16											HC208-23		1.55
HCF208	40	130	102	21	16	36	16	55.9	56.3	21.4	M14	HC208	F208	1.99
HCF208-24	1-1/2	5-1/8	4-1/64	53/64	5/8	1-27/32	5/8	2-13/64	2.217	0.843	1/2	HC208–24		2.04
HCF208-25	1-9/16											HC208-25		2.00
HCF209	45	137	105	22	18	38	16	56.9	56.3	21.4	M14	HC209	F209	2.32
HCF209-26	1-5/8											HC209-26		2.43
HCF209-27	1-11/16	5-13/32	4-9/64	55/64	23/32	1-1/2	5/8	2-15/64	2.217	0.843	1/2	HC209-27		2.38
HCF209-28	1-3/4											HC209-28		2.34
HCF210	50	143	111	22	18	40	16	60.1	62.7	24.6	M14	HC210	F210	2.61
HCF210-29	1-13/16											HC210-29		2.76
HCF210-30	1-7/8	5-5/8	4-3/8	55/64	23/32	1-9/16	5/8	2-3/8	2.469	0.969	1/2	HC210-30		2.70
HCF210-31	1-15/16											HC210-31		2.64
HCF210-32	2											HC210-32		2.58
HCF211	55	162	130	25	20	43	19	68.6	71.4	27.8	M16	HC211	F211	3.52
HCF211-32	2											HC211-32		3.72
HCF211-33	2-1/16	6-3/8	5-1/8	63/64	25/32	1-11/16	3/4	2-45/64	2.811	1.094	5/8	HC211-33		3.64
HCF211-34	2-1/8											HC211-34		3.57
HCF211-35	2-3/16											HC211-35		3.49
HCF212	60	175	143	29	20	48	19	75.8	77.8	31	M16	HC212	F212	4.62
HCF212-36	2-1/4											HC212-36		4.78
HCF212-37	2-5/16	6-57/64	5-5/8	1-9/64	25/32	1-57/64	3/4	2-63/64	3.063	1.220	5/8	HC212-37		4.69
HCF212-38	2-3/8											HC212-38		4.64
HCF212-39	2-7/16											HC212-39		4.51
HCF213	65	187	149	30	22	50	19	81.6	85.7	34.1	M16	HC213	F213	5.55
HCF213–40	2-1/2	7-23/64	5-55/64	1-3/16	55/64	1-31/32	3/4	3-7/32	3.374	1.343	5/8	HC213-40		5.65
HCF213-41	2-9/16											HC213-41		5.54
HCF214	70	193	152	31	22	54	19	82.6	85.7	34.1	M16	HC214	F214	6.35
HCF214-42	2-3/8											HC214-42		6.59
HCF214-43	2-11/16	7-19/32	5-63/64	1-7/32	55/64	2-1/8	3/4	3-1/4	3.374	1.343	5/8	HC214-43		6.48
HCF214-44	2-3/4											HC214-44		6.36
HCF215	75	200	159	34	22	56	19	88.8	92.1	37.3	M16	HC215	F215	7.54
HCF215-45	2-13/16											HC215-45		7.84
HCF214-46	2-7/8	7-7/8	6-17/64	1-11/32	55/64	2-7/32	3/4	3-1/2	3.626	1.426	5/8	HC215-46		7.71
HCF214-47	2-15/16											HC215-47		7.58
HCF214-48	3											HC215-48		7.44

UKF2 (Normal-duty)

Flange Units (Square)
(With adapter mounted)

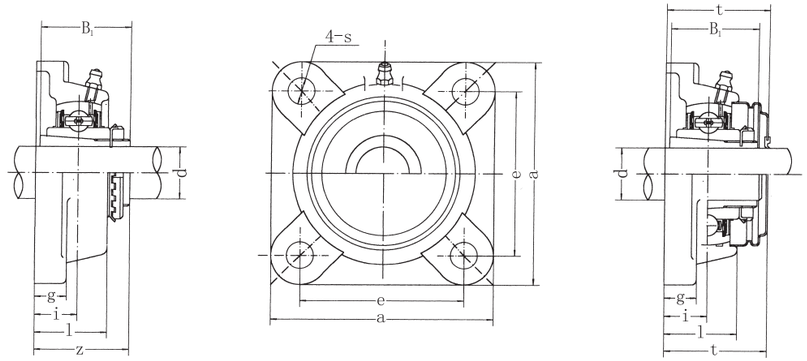

UKF-C1(D1)

Unit No.	Dimensions mm / In. d	a	e	i	g	l	s	z	t	B1	Bolt mm / inch	Bearing No.	Housing No.	Weight (kg)
UKF205;H2305	20	95	70	16	14	27	12	35.5	40	35	M10	UK205;H2305	F205	0.85
UKF205;HE2305	3/4	3-3/4	2-3/4	5/8	35/64	1-1/16	15/32	1-25/64	1-9/16	1.378	3/8	UK205;HE2305		
UKF206;H2306	25	108	83	18	14	31	12	39	44.5	38	M10	UK206;H2306	F206	1.16
UKF206;HS2306	7/8	4-1/4	3-17/64	45/64	35/64	1-7/32	15/32	1-17/32	1-3/4	1.496	3/8	UK206;HS2306		
UKF206;HE2306	1											UK206;HE2306		
UKF207;H2307	30	117	92	19	16	34	14	42.5	48.5	43	M12	UK207;H2307	F207	1.55
UKF207;HS2307	1-1/8	4-39/64	3-5/8	3/4	5/8	1-11/32	35/64	1-43/64	1-29/32	1.693	7/16	UK207;HS2307		
UKF208;H2308	35	130	102	21	16	36	16	46.5	55.5	46	M14	UK208;H2308	F208	1.94
UKF208;HE2308	1-1/4	5-1/8	4-1/64	53/64	5/8	1-27/64	5/8	1-53/64	2-3/16	1.811	1/2	UK208;HE2308		
UKF208;HS2308	1-3/8											UK208;HS2308		
UKF209;H2309	40	137	105	22	18	38	16	48.5	56.5	50	M14	UK209;H2309	F209	2.30
UKF209;HA2309	1-7/16	5-13/32	4-9/64	55/64	23/32	1-1/2	5/8	1-29/32	2-7/32	1.969	1/2	UK209;HA2309		
UKF209;HE2309	1-1/2											UK209;HE2309		
UKF209;HS2309	1-5/8											UK209;HS2309		
UKF210;H2310	45	143	111	22	18	40	16	50	59.5	55	M14	UK210;H2310	F210	2.59
UKF210;HS2310	1-5/8											UK210;HS2310		
UKF210;HA2310	1-11/16	5-5/8	4-3/8	55/64	23/32	1-9/16	5/8	1-31/32	2-11/32	2.165	1/2	UK210;HA2310		
UKF210;HE2310	1-3/4											UK210;HE2310		
UKF211;H2311	50	162	130	25	20	43	19	54.5	63	59	M16	UK211;H2311	F211	3.46
UKF211;HS2311	1-7/8											UK211;HS2311		
UKF211;HA2311	1-15/16	6-3/8	5-1/8	63/64	25/32	1-11/16	3/4	2-9/64	2-31/64	2.323	5/8	UK211;HA2311		
UKF211;HE2311	2											UK211;HE2311		
UKF212;H2312	55	175	143	29	20	48	19	61	73.5	62	M16	UK212;H2312	F212	4.33
UKF212;HS2312	2-1/8	6-57/64	5-5/8	1-9/64	25/32	1-57/64	3/4	2-13/32	2-57/64	2.441	5/8	UK212;HS2312		
UKF213;H2313	60	187	149	30	22	50	19	64	74.5	65	M16	UK213;H2313	F213	4.90
UKF213;HA2313	2-3/16											UK213;HA2313		
UKF213;HE2313	2-1/4	7-23/64	5-55/64	1-3/16	55/64	1-31/32	3/4	2-33/64	2-15/16	2.559	5/8	UK213;HE2313		
UKF213;HS2313	2-3/8											UK213;HS2313		
UKF215;H2315	65	200	159	34	22	56	19	71	83.5	73	M16	UK215;H2315	F215	7.02
UKF215;HA2315	2-7/16	7-7/8	6-17/64	1-11/32	55/64	2-7/32	3/4	2-51/64	3-9/32	2.874	5/8	UK215;HA2315		
UKF215;HE2315	2-1/2											UK215;HE2315		
UKF216;H2316	70	208	165	34	22	58	23	73.5	88.5	78	M20	UK216;H2316	F216	7.76
UKF216;HA2316	2-11/16	8-3/16	6-1/2	1-11/32	55/64	2-9/32	29/32	2-57/64	3-31/64	3.071	3/4	UK216;HA2316		
UKF216;HE2316	2-3/4											UK216;HE2316		
UKF217;H2317	75	220	175	36	24	63	23	77	92.6	82	M20	UK217;H2317	F217	10.08
UKF217;HA2317	2-15/16	8-21/32	6-57/64	1-27/64	15/16	2-15/32	29/32	3-1/32	3-41/64	3.228	3/4	UK217;HA2317		
UKF217;HE2317	3											UK217;HE2317		
UKF218;H2318	80	235	187	40	24	68	23	81.5	101.5	86	M20	UK218;H2318	F218	12.44
UKF218;HA2318	3-3/16	9-1/4	7-23/64	1-37/64	15/16	2-11/16	29/32	3-13/64	4	3.386	3/4	UK218;HA2318		

Flange Units (Square)

UCFS2

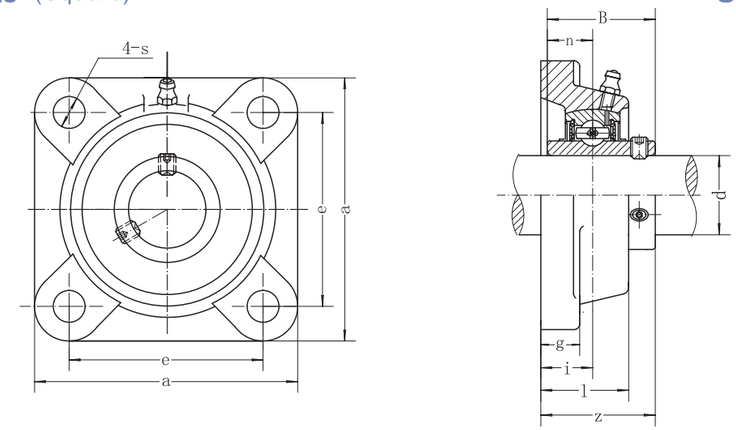

Unit No.	Dimensions mm / in. d	a	e	i	g	l	S	z	B	n	Bolt Size mm / inch	Bearing No.	Housing No.	Weight (kg)
UCFS204	20	86	63.5	20.6	9.5	33	11	38.9	31	12.7	M10	UC204	FS204	0.64
UCF204-12	3/4	3-3/8	2-1/2	13/16	3/8	1-19/64	7/16	1-17/32	1.2205	0.500	3/8	UC204-12		0.64
UCFS205	25	95	70	21	11	35	11.5	40.8	34.1	14.3	M10	UC205	FS205	0.88
UCFS205-13	13/16											UC205-13		0.92
UCFS205-14	7/8											UC205-14		0.91
UCFS205-15	15/16	3-3/4	2-3/4	53/64	7/16	1-3/8	29/64	1-39/64	1.3425	0.563	3/8	UC205-15		0.89
UCFS205-16	1											UC205-16		0.88
UCFS206	30	108	82.5	22.6	13	37	13	44.8	38.1	15.9	M12	UC206	FS206	1.29
UCFS206-17	1-1/16											UC206-17		1.32
UCFS206-18	1-1/8											UC206-18		1.31
UCFS206-19	1-3/16	4-1/4	3-1/4	57/64	33/64	1-29/64	33/64	1-49/64	1.5000	0.626	7/16	UC206-19		1.29
UCFS206-20	1-1/4											UC206-20		1.28
UCFS207	35	117	92	22	13	38	13	47.4	42.9	17.5	M12	UC207	FS207	1.56
UCFS207-20	1-1/4											UC207-20		1.62
UCFS207-21	1-5/16											UC207-21		1.59
UCFS207-22	1-3/8	4-39/64	3-5/8	55/64	33/64	1-1/2	33/64	1-55/64	1.6890	0.689	7/16	UC207-22		1.56
UCFS207-23	1-7/16											UC207-23		1.53
UCFS208	40	130	101.5	24.5	16	41	14	54.7	49.2	19	M12	UC208	FS208	2.19
UCFS208-24	1-1/2											UC208-24		2.23
UCFS208-25	1-9/16	5-1/8	4	31/32	5/8	1-39/64	35/64	2-5/32	1.9370	0.748	7/16	UC208-25		2.20
UCFS209	45	137	105	24.5	16	42	16	54.7	49.2	19	M14	UC209	FS209	2.43
UCFS209-26	1-5/8											UC209-26		2.53
UCFS209-27	1-11/16	5-25/64	4-9/64	31/32	5/8	1-21/32	5/8	2-5/32	1.9370	0.748	9/16	UC209-27		2.49
UCFS209-28	1-3/4											UC209-28		2.45
UCFS210	50	143	111	27.8	16	46	16	60.4	51.6	19	M14	UC210	FS210	2.69
UCFS210-29	1-13/16											UC210-29		2.81
UCFS210-30	1-7/8											UC210-30		2.76
UCFS210-31	1-15/16	5-5/8	4-3/8	1-3/32	5/8	1-13/16	5/8	2-3/8	2.0315	0.748	9/16	UC210-31		2.71
UCFS210-32	2											UC210-32		2.67
UCFS211	55	162	130	31	17.5	50	17	64.4	55.6	22.2	M14	UC211	FS211	3.81
UCFS211-32	2											UC211-32		3.96
UCFS211-33	2-1/16											UC211-33		3.90
UCFS211-34	2-1/8	6-3/8	5-1/8	1-7/32	11/16	1-31/32	43/64	2-17/32	2.1890	0.874	9/16	UC211-34		3.85
UCFS211-35	2-3/16											UC211-35		3.79
UCFS212	60	175	143	34	17.5	55	17	73.7	65.1	25.4	M14	UC212	FS212	4.90
UCFS212-36	2-1/4											UC212-36		5.03
UCFS212-37	2-5/16											UC212-37		4.95
UCFS212-38	2-3/8	6-57/64	5-5/8	1-11/32	11/16	2-11/64	43/64	2-39/32	2.5630	1.000	9/16	UC212-38		4.88
UCFS212-39	2-1/16											UC212-39		4.81
UCFS213	65	184	149	38	22	58	18	77.7	65.1	25.4	M16	UC213	FS213	6.01
UCFS213-40	2-1/2											UC213-40		6.10
UCFS213-41	2-9/16	7-1/4	5-55/64	1-1/2	55/64	2-9/32	45/64	3-1/16	2.5630	1.000	5/8	UC213-41		6.01
UCFS214	70	188	152	38	23	60	18	82.4	74.6	30.2	M16	UC214	FS214	6.51
UCFS214-42	2-5/8											UC214-42		6.72
UCFS214-43	2-11/16	7-13/32	5-63/64	1-1/2	29/32	2-23/64	45/64	3-1/4	2.9370	1.189	5/8	UC214-43		6.62
UCFS214-44	2-3/4											UC214-44		6.52
UCFS215	75	200	152.4	41	24	62	20	85.5	77.8	33.3	M18	UC215	FS215	7.49
UCFS215-45	2-13/16											UC215-45		7.74
UCFS215-46	2-7/8											UC215-46		7.63
UCFS215-47	2-15/16	7-7/8	6	1-39/64	15/16	2-7/16	25/32	3-23/64	3.0630	1.311	23/32	UC215-47		7.52
UCFS215-48	3											UC215-48		7.40

UCCF2 (Normal-duty)

Flange Units (Square)

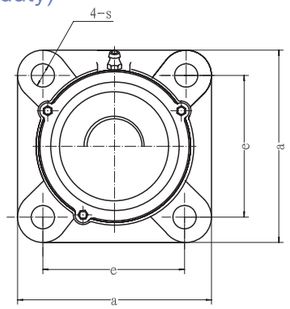

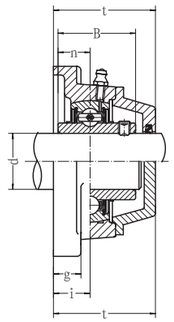

Unit No.	Dimensions mm / in. d	a	e	i	g	s	t	B	n	Bolt Size mm / inch	Bearing No.	Housing No.	Weight (kg)
UCCF204	20	86	64	15	12	12	46	31	12.7	M10	UC204	CF204	0.76
UCCF204-12	3/4	3-3/8	2-33/64	19/32	15/32	15/32	1-13/16	1.2205	0.500	3/8	UC204-12		0.76
UCCF205	25	95	70	16	14	12	51	34.1	14.3	M10	UC205	CF205	1.12
UCCF205-13	13/16										UC205-13		1.16
UCCF205-14	7/8										UC205-14		1.15
UCCF205-15	15/16	3-3/4	2-3/4	5/8	35/64	15/32	2-1/64	1.3425	0.563	3/8	UC205-15		1.13
UCCF205-16	1										UC205-16		1.12
UCCF206	30	108	83	18	14	12	55	38.1	15.9	M10	UC206	CF206	1.42
UCCF206-17	1-1/16										UC206-17		1.43
UCCF206-18	1-1/8										UC206-18		1.44
UCCF206-19	1-3/16	4-1/4	3-17/64	45/64	35/64	15/32	2-11/64	1.5000	0.626	3/8	UC206-19		1.42
UCCF206-20	1-1/4										UC206-20		1.41
UCCF207	35	117	92	19	16	14	59	42.9	17.5	M12	UC207	CF207	1.83
UCCF207-20	1-1/4										UC207-20		1.89
UCCF207-21	1-5/16										UC207-21		1.86
UCCF207-22	1-3/8	4-39/64	3-5/8	3/4	5/8	35/64	2-21/64	1.6890	0.689	7/16	UC207-22		1.83
UCCF207-23	1-7/16										UC207-23		1.80
UCCF208	40	130	102	21	16	16	66	49.2	19	M14	UC208	CF209	2.51
UCCF208-24	1-1/2										UC208-24		2.55
UCCF208-25	1-9/16	5-1/8	4-1/64	53/64	5/8	5/8	2-21/64	1.9370	0.748	1/2	UC208-25		2.52
UCCF209	45	137	105	22	18	16	67	49.2	19	M14	UC209	CF209	2.90
UCCF209-26	1-5/8										UC209-26		3.00
UCCF209-27	1-11/16	5-13/32	4-9/64	55/64	23/32	5/8	2-41/64	1.9370	0.748	1/2	UC209-27		2.96
UCCF209-28	1-3/4										UC209-28		2.92
UCCF210	50	143	111	22	18	16	71	51.6	19	M14	UC210	CF210	3.16
UCCF210-29	1-13/16										UC210-29		3.28
UCCF210-30	1-7/8										UC210-30		3.23
UCCF210-31	1-15/16	5-5/8	4-3/8	55/64	23/32	5/8	2-51/64	2.0315	0.748	1/2	UC210-31		3.18
UCCF210-32	2										UC210-32		3.14
UCCF211	55	162	130	25	20	19	75	55.6	22.2	M16	UC211	CF211	4.47
UCCF211-32	2										UC211-32		4.62
UCCF211-33	2-1/16										UC211-33		4.56
UCCF211-34	2-1/8	6-3/8	5-1/8	63/64	25/32	3/4	2-61/64	2.1890	0.874	5/8	UC211-34		4.51
UCCF211-35	2-3/16										UC211-35		4.45
UCCF212	60	175	143	29	20	19	86	65.1	25.4	M16	UC212	CF212	5.77
UCCF212-36	2-1/4										UC212-36		5.90
UCCF212-37	2-5/16										UC212-37		5.82
UCCF212-38	2-3/8	6-57/64	5-5/8	1-9/64	25/32	3/4	3-25/64	2.5630	1.000	5/8	UC212-38		5.75
UCCF212-39	2-7/16										UC212-39		5.68
UCCF213	65	187	149	30	22	19	89	65.1	25.4	M16	UC213	CF213	7.08
UCCF213-40	2-1/2										UC213-40		7.17
UCCF213-41	2-9/16	7-23/64	5-55/64	1-3/16	55/64	3/4	3-1/2	2.5630	1.000	5/8	UC213-41		7.08
UCCF214	70	193	152	31	22	19	98	74.6	30.2	M16	UC214	CF214	7.80
UCCF214-42	2-5/8										UC214-42		8.01
UCCF214-43	2-11/16	7-19/32	5-63/64	1-7/32	55/64	3/4	3-55/64	2.9370	1.189	5/8	UC214-43		7.91
UCCF214-44	2-3/4										UC214-44		7.81
UCCF215	75	200	159	34	22	19	102	77.8	33.3	M16	UCF215	CF215	8.81
UCCF215-45	2-13/16										UC215-45		9.06
UCCF215-46	2-7/8	7-7/8	6-17/64	1-11/32	55/64	3/4	4-1/64	3.0630	1.311	5/8	UC215-46		8.95
UCCF21	2-15/16										UC215-47		8.84
UCCF215-48	3										UC215-48		8.72
UCCF216	80	208	165	34	22	23	107	82.6	33.3	M20	UC216	CF216	10.20
UCCF216-49	3-1/16										UC216-49		10.38
UCCF216-50	3-1/8	8-3/16	6-1/2	1-11/32	55/64	29/32	4-7/32	3.2520	1.311	3/4	UC216-50		10.25
UCCF216-51	3-3/16										UC216-51		10.12
UCCF217	85	220	175	36	24	23	111	85.7	34.1	M20	UC217	CF217	12.46
UCCF217-52	3-1/4										UC217-52		12.68
UCCF217-53	3-5/16	8-21/23	6-57/64	1-27/64	15/16	29/32	4-3/8	3.3740	1.343	3/4	UC217-53		12.54
UCCF217-55	3-7/16										UC217-55		12.25
UCCF218	90	235	187	40	24	23	122	96	39.7	M20	UC218	CF218	14.86
UCCF218-56	3-1/2	9-1/4	7-23/64	1-37/64	15/16	29/32	4-51/64	3.7795	1.5630	3/4	UC218-56		14.97

Flange Units (Square)

UCFX (Medium-duty)

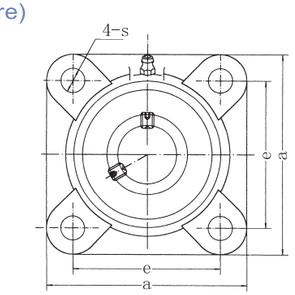

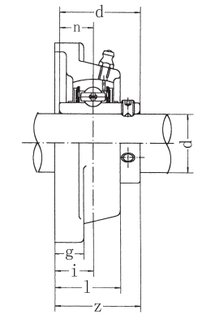

Unit No.	Dimensions mm / in. d	a	e	i	g	l	s	z	B	n	Bolt Size mm / inch	Bearing No.	Housing No.	Weight (kg)
UCFX05	25	108	83	18	13	30	12	40.2	38.1	15.9	M10	UCX05	FX05	1.0
UCFX05-13	13/16											UCX05-13		
UCFX05-14	7/8	4-1/4	3-17/64	45/64	1/2	1-3/16	15/32	1-19/32	1.5000	0.626	3/8	UCX05-14		
UCFX05-15	15/16											UCX05-15		
UCFX05-16	1											UCX05-16		
UCFX06	30	117	92	19	14	34	16	44.4	42.9	17.5	M14	UCX06	FX06	1.7
UCFX06-17	1-1/16											UCX06-17		
UCFX06-18	1-1/8	4-39/64	3-5/8	3/4	9/16	1-11/32	5/8	1-3/4	1.6890	0.689	1/2	UCX06-18		
UCFX06-19	1-3/16											UCX06-19		
UCFX06-20	1-1/4											UCX06-20		
UCFX07	35	130	102	21	14	38	16	51.2	49.2	19	M14	UCX07	FX07	2.1
UCFX07-21	1-5/16											UCX07-21		
UCFX07-22	1-3/8	5-1/8	4-1/64	53/64	9/16	1-1/2	5/8	2-1/64	1.9370	0.748	1/2	UCX07-22		
UCFX07-23	1-7/16											UCX07-23		
UCFX08	40	137	105	22	14	40	19	52.2	49.2	19	M16	UCX08	FX08	2.4
UCFX08-24	1-1/2	5-13/32	4-9/64	55/64	9/16	1-9/16	3/4	2-1/64	1.9370	0.748	5/8	UCX08-24		
UCFX08-25	1-9/16											UCX08-25		
UCFX09	45	143	111	23	14	40	19	55.6	51.6	19	M16	UCX09	FX09	2.5
UCFX09-26	1-5/8											UCX09-26		
UCFX09-27	1-11/16	5-5/8	4-3/8	29/32	9/16	1-9/16	3/4	2-3/16	2.0315	0.748	5/8	UCX09-27		
UCFX09-28	1-3/4											UCX09-28		
UCFX09-29	1-13/16											UCX09-29		
UCFX10	50	162	130	26	20	44	19	59.4	55.6	22.2	M16	UCX10	FX10	3.9
UCFX10-30	1-7/8											UCX10-30		
UCFX10-31	1-15/16	6-3/8	5-1/8	1-1/32	25/32	1-23/32	3/4	2-11/32	2.1890	0.874	5/8	UCX10-31		
UCFX10-32	2											UCX10-32		
UCFX11	55	175	143	29	20	49	19	68.7	65.1	25.4	M16	UCX11	FX11	4.9
UCFX11-33	2-1/16											UCX11-33		
UCFX11-34	2-1/8											UCX11-34		
UCFX11-35	2-3/16	6-57/64	5-5/8	1-9/64	25/32	1-15/16	3/4	2-45/64	2.5630	1.000	5/8	UCX11-35		
UCFX11-36	2-1/4											UC211-36		
UCFX11-37	2-5/16											UC211-37		
UCFX12	60	187	149	34	21	59	19	73.7	65.1	25.4	M16	UCX12	FX12	5.2
UCFX12-38	2-3/8	7-23/64	5-55/64	1-11/32	13/16	2-5/16	3/4	2-29/32	2.5630	1.000	5/8	UCX12-38		
UCFX12-39	2-7/16											UCX12-39		
UCFX13	65	187	149	34	21	59	19	78.4	74.6	30.2	M16	UCX13	FX13	5.3
UCFX13-40	2-1/2	7-23/64	5-55/64	1-11/32	13/16	2-5/16	3/4	3-3/32	2.9370	1.189	5/8	UCX13-40		
UCFX13-41	2-9/16											UCX13-41		
UCFX14	70	197	152	37	24	60	23	81.5	77.8	33.3	M20	UCX14	FX14	7.3
UCFX14-42	2-5/8											UCX14-42		
UCFX14-43	2-11/16	7-3/4	5-63/64	1-29/64	15/16	2-3/8	29/32	3-13/64	3.0630	1.311	3/4	UCX14-43		
UCFX14-44	2-3/4											UCX14-44		
UCFX15	75	197	152	40	24	68	23	89.3	82.6	33.3	M20	UCX15	FX15	8.1
UCFX15-45	2-13/16											UCX15-45		
UCFX15-46	2-7/8	7-3/4	5-63/64	1-37/64	15/16	2-11/16	29/32	3-33/64	3.2520	1.311	3/4	UCX15-46		
UCFX15-47	2-15/16											UCX15-47		
UCFX15-48	3											UCX15-48		
UCFX16	80	214	171	40	24	70	23	91.6	85.7	34.1	M20	UCX16	FX16	9.9
UCFX16-49	3-1/16											UCX16-49		
UCFX16-50	3-1/8	8-7/16	6-47/64	1-37/64	15/16	2-3/4	29/32	3-39/64	3.3740	1.343	3/4	UCX16-50		
UCFX16-51	3-3/16											UCX16-51		
UCFX16-52	3-1/4											UCX16-52		
UCFX17	85	214	171	40	24	70	23	96.3	96	39.7	M20	UCX17	FX17	11
UCFX17-53	3-5/16	8-7/16	6-47/64	1-37/64	15/16	2-3/4	29/32	3-25/32	3.7795	1.563	3/4	UCX17-53		
UCFX17-55	3-7/16											UCX17-55		
UCFX18	90	214	171	45	24	76	23	106.1	104	42.9	M20	UCX18	FX18	11
UCFX18-56	3-1/2	8-7/16	6-47/64	1-49/64	15/16	3	29/32	4-3/16	4.0945	1.689	3/4	UCX18-56		
UCFX20	100	268	211	59	31	97	31	127.3	117.5	49.2	M27	UCX20	FX20	17
UCFX20-64	4	10-9/16	8-5/16	2-21/64	1-7/32	1-7/32	3-13/16	1-7/32	4.6260	1.689	1	UCX20-64		

UKFX (Medium-duty)

Flange Units (Square) (with adapter mounted)

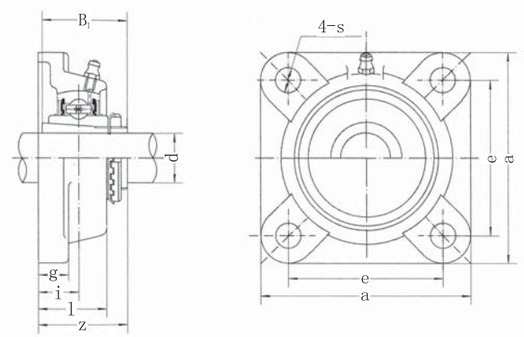

Unit No.	Dimensions mm in.									Bolt Size mm inch	Bearing No.	Housing No.	Weight (kg)
	d	a	e	i	g	l	s	z	B_1				
UKFX05;H2305	20	108	83	18	13	30	12	39	35	M10	UKX05;H2305	FX05	1.2
UKFX05;HE2305	3/4	4-1/4	3-17/64	45/64	1/2	1-3/16	15/32	1-17/32	1.378	3/8	UKX05;HE2305		
UKFX06;H2306	25	117	92	19	14	34	16	41.5	38	M14	UKX06;H2306	FX06	1.6
UKFX06;HS2306	7/8	4-39/64	3-5/8	3/4	9/16	1-11/32	5/8	1-41/64	1.496	1/2	UKX06;HS2306		
UKFX06;HE2306	1										UKX06;HE2306		
UKFX07;H2307	30	130	102	21	14	38	16	45.5	43	M14	UKX07;H2307	FX07	2.0
UKFX07;HS2307	1-1/8	5-1/8	4-1/64	53/64	9/16	1-1/2	5/8	1-51/64	1.693	1/2	UKX07;HS2307		
UKFX08;H2308	35	137	105	22	14	40	19	47.5	46	M16	UKX08;H2308	FX08	2.3
UKFX08;HE2308	1-1/4	5-13/32	4-9/64	55/64	9/16	1-9/16	3/4	1-7/8	1.811	5/8	UKX08;HE2308		
UKFX08;HS2308	1-3/8										UKX08;HS2308		
UKFX09;H2309	40	143	111	23	14	40	19	50	50	M16	UKX09;H2309	FX09	2.7
UKFX09;HA2309	1-7/16										UKX09;HA2309		
UKFX09;HE2309	1-1/2	5-5/8	4-3/8	29/32	9/16	1-9/16	3/4	1-31/32	1.969	5/8	UKX09;HE2309		
UKFX09;HS2309	1-5/8										UKX09;HS2309		
UKFX10;H2310	45	162	130	26	20	44	19	55.5	55	M16	UKX10;H2310	FX10	3.6
UKFX10;HS2310	1-5/8										UKX10;HS2310		
UKFX10;HA2310	1-11/16	6-3/8	5-1/8	1-1/32	25/32	1-23/32	3/4	2-3/16	2.165	5/8	UKX10;HA2310		
UKFX10;HE2310	1-3/4										UKX10;HE2310		
UKFX11;H2311	50	175	143	29	20	49	19	60	59	M16	UKX11;H2311	FX11	4.6
UKFX11;HS2311	1-7/8										UKX11;HS2311		
UKFX11;HA2311	1-15/16	6-57/64	5-5/8	1-9/64	25/32	1-15/16	3/4	2-23/64	2.323	5/8	UKX11;HA2311		
UKFX11;HE2311	2										UKX11;HE2311		
UKFX12;H2312	55	187	149	34	21	59	19	67	62	M16	UKX12;H2312	FX12	5.5
UKFX12;HS2312	2-1/8	7-23/64	5-55/64	1-11/32	13/16	2-5/16	3/4	2-41/64	2.441	5/8	UKX12;HS2312		
UKFX13;H2313	60	187	149	34	21	59	19	68	65	M16	UKX13;H2313	FX13	6.0
UKFX13;HA2313	2-3/16										UKX13;HA2313		
UKFX13;HE2313	2-1/4	7-23/64	5-55/64	1-11/32	13/16	2-5/16	3/4	2-11/16	2.559	5/8	UKX13;HE2313		
UKFX13;HS2313	2-3/8										UKX13;HS2313		
UKFX15;H2315	65	197	152	40	24	68	23	77.5	73	M20	UKX15;H2315	FX15	8.1
UKFX15;HA2315	2-7/16	7-3/4	5-63/64	1-37/64	15/16	2-11/16	29/32	2-3/64	2.874	3/4	UKX15;HA2315		
UKFX15;HS2315	2-1/2										UKX15;HS2315		
UKFX16;H2316	70	214	171	40	24	70	23	80	78	M20	UKX16;H2316	FX16	9.5
UKFX16;HA2316	2-11/16	8-7/16	6-47/64	1-37/64	15/16	2-3/4	29/32	3-5/32	3.071	3/4	UKX16;HA2316		
UKFX16;HS2316	2-3/4										UKX16;HS2316		
UKFX17;H2317	75	214	171	40	24	70	23	81.5	82	M20	UKX17;H2317	FX17	10.4
UKFX17;HA2317	2-15/16	8-7/16	6-47/64	15/16	2-3/4	29/32	3-13/64	3.228	3/4	3/4	UKX17;HA2317		
UKFX17;HE2317	3			1-37/64	15/16	2-3/4	29/32	3-13/64	3.228		UKX17;HE2317		
UKFX18;H2318	80	214	171	45	24	76	23	88	86	M20	UKX18;H2318	FX18	11.4
UKFX18;HA2318	3-3/16	8-7/16	6-47/64	1-49/64	15/16	3	29/32	3-15/32	3.386	3/4	UKX18;HA2318		
UKFX20;H2320	90	268	211	59	31	97	31	106	97	M27	UKX20;H2320	FX20	18.4
UKFX20;HA2320	3-1/2	10-9/16	8-5/16	2-21/64	1-7/32	3-13/16	1-7/32	4-3/64	3.814	1	UKX20;HA2320		

Flange Units (Square)

UCF3 (Heavy-duty)

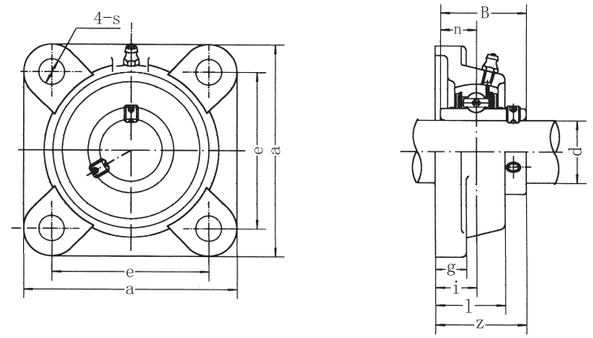

Unit No.	Dimensions mm in										Bolt Size mm inch	Bearing No.	Housing No.	Weight (kg)
	d	a	e	i	g	l	s	z	B	n				
UCF305	25	110	80	16	13	29	16	39	38	15	M14	UC305	F305	1.1
UCF305-13	13/16											UC305-13		
UCF305-14	7/8	4-11/32	3-5/32	5/8	1/2	1-5/32	5/8	1-17/32	1.4961	0.591	1/2	UC305-14		
UCF305-15	15/16											UC305-15		
UCF305-16	1											UC305-16		
UCF306	30	125	95	18	15	32	16	44	43	17	M14	UC306	F306	1.6
UCF306-17	1-1/16	4-29/32	3-37/64	45/64	19/32	1-1/4	5/8	1-47/64	1.6929	0.669	1/2	UC306-17		
UCF306-18	1-1/8											UC306-18		
UCF306-19	1-3/16											UC306-19		
UCF307	35	135	100	20	16	36	19	49	48	19	M16	UC307	F307	2
UCF307-20	1-1/4											UC307-20		
UCF307-21	1-5/16	5-5/16	3-15/16	25/32	5/8	1-13/32	3/4	1-59/64	1.8898	0.748	5/8	UC307-21		
UCF307-22	1-3/8											UC307-22		
UCF307-23	1-7/16											UC307-23		
UCF308	40	150	112	23	17	40	19	56	52	19	M16	UC308	F308	2.7
UCF308-24	1-1/2	5-29/32	4-13/32	29/32	21/32	1-9/16	3/4	2-13/64	2.0472	0.748	5/8	UC308-24		
UCF308-25	1-9/16											UC308-25		
UCF309	45	160	125	25	18	44	19	60	57	22	M16	UC309	F309	3.4
UCF309-26	1-5/8											UC309-26		
UCF309-27	1-11/16	6-5/16	4-59/64	63/64	23/32	1-23/32	3/4	2-23/64	2.2441	0.866	5/8	UC309-27		
UCF309-28	1-3/4											UC309-28		
UCF310	50	175	132	28	19	48	23	67	61	22	M20	UC310	F310	4.5
UCF310-29	1-13/16											UC310-29		
UCF310-30	1-7/8	6-7/8	5-13/64	1-7/64	3/4	1-7/8	29/32	2-41/64	2.4016	0.866	3/4	UC310-30		
UCF310-31	1-15/16											UC310-31		
UCF311	55	185	140	30	20	52	23	71	66	25	M20	UC311	F311	5.5
UCF311-32	2											UC311-32		
UCF311-33	2-1/16	7-9/32	5-33/64	1-3/16	25/32	2-1/16	29/32	2-51/64	2.5984	0.948	3/4	UC311-33		
UCF311-34	2-1/8											UC311-34		
UCF311-35	2-3/16											UC311-35		
UCF312	60	195	150	33	22	56	23	78	71	26	M20	UC312	F312	6.5
UCF312-36	2-1/4											UC312-36		
UCF312-37	2-5/16	7-11/16	5-29/32	1-19/64	7/8	2-7/32	29/32	3-5/64	2.7953	1.024	3/4	UC312-37		
UCF312-38	2-3/8											UC312-38		
UCF312-39	2-7/16											UC312-39		
UCF313	65	208	166	33	22	58	23	78	75	30	M20	UC313	F313	7.9
UCF313-40	2-1/2	8-3/16	6-17/32	1-19/64	55/64	2-9/32	29/32	3-5/64	2.9528	1.818	3/4	UC313-40		
UCF313-41	2-9/16											UC313-41		
UCF314	70	226	178	36	25	61	25	81	78	33	M22	UC314	F314	9.5
UCF314-42	2-5/8											UC314-42		
UCF314-43	2-11/16	8-29/32	6-1/64	1-27/64	31/32	2-13/32	63/64	3-3/16	3.0708	1.299	7/8	UC314-43		
UCP314-44	2-3/4											UC314-44		
UCF315	75	236	184	39	25	66	25	89	82	32	M22	UC315	F315	1.2
UCF315-45	2-13/16											UC315-45		
UCF315-46	2-7/8	9-19/32	7-1/4	1-17/32	31/32	2-19/32	63/64	3-1/2	3.2283	1.260	7/8	UC315-46		
UCF315-47	2-15/16											UC315-47		
UCF315-48	3											UC315-48		
UCF316	80	250	196	38	27	68	31	90	86	34	M27	UC316	F316	14
UCF316-49	3-1/16											UC316-49		
UCF316-50	3-1/8	9-27/32	7-23/32	1-1/2	1-1/16	2-11/16	1-7/32	3-35/64	3.3858	1.339	1	UC316-50		
UCF316-51	3-3/16											UC316-51		
UCF317	85	260	204	44	27	74	31	100	96	40	M27	UC317	F317	16
UCF317-52	3-1/4											UC317-52		
UCF317-53	3-5/16	10-1/4	8-1/32	1-47/64	1-1/16	2-29/32	1-7/32	3-15/16	3.7795	1.575	1	UC317-53		
UCF317-55	3-7/16											UC317-55		
UCF318	90	280	216	44	30	76	35	100	96	40	M30	UC318	F318	19
UCF318-55	3-7/16	11-1/32	8-1/2	1-47/64	1-3/16	3	1-3/8	3-15/16	3.7795	1.575	1-1/8	UC318-55		
UCF318-56	3-1/2											UC318-56		
UCF319	95	290	228	59	30	94	35	121	103	41	M30	UC319	F319	22
UCF319-58	3-5/8											UC319-58		
UCF319-59	3-11/16	11-13/32	8-31/32	2-21/64	1-3/16	3-11/16	1-3/8	4-49/64	4.0551	1.614	1-1/8	UC319-59		
UCF319-60	3-3/4											UC319-60		
UCF320	100	310	242	59	32	94	38	125	108	42	M33	UC320	F320	26
UCF320-64	4	12-7/32	9-17/32	2-21/64	1-1/4	3-11/16	1-1/2	4-29/32	4.252	1.654	1-1/4	UC320-64		
UCF322	110	340	266	60	35	96	41	131	117	46	M36	UC322	F322	38
		13-3/8	10-15/32	2-23/64	1-3/8	3-25/32	1-39/64	5-5/32	4.6063	1.8110				
UCF324	120	370	290	65	40	110	41	140	126	51	M36	UC324	F324	50
		14-9/16	11-27/64	2-9/16	1-9/16	4-11/32	1-39/64	5-1/2	4.9606	2.0079				
UCF326	130	410	320	65	45	115	41	146	135	54	M36	UC326	F326	66
		16-5/32	12-19/32	2-9/16	1-25/32	4-17/32	1-39/64	5-3/4	5.3150	2.1260				
UCF328	140	450	350	75	55	125	41	161	145	59	M36	UC328	F328	90
		17-23/32	13-25/32	2-61/64	2-5/32	4-29/32	1-39/64	6-11/32	5.7086	2.3228				

UKF3 (Heavy-duty)

Flange Units (Square) (with adapter mounted)

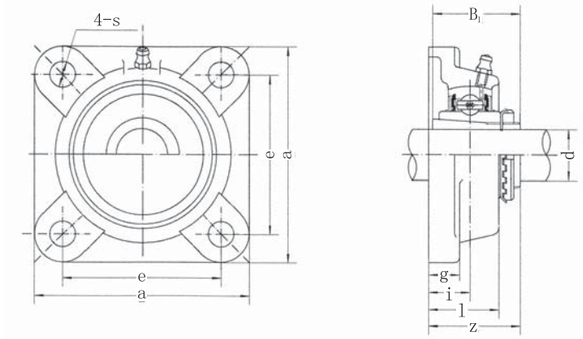

Unit No.	Dimensions mm / in.									Bolt Size mm / inch	Bearing No.	Housing No.	Weight (kg)
	d	a	e	i	g	l	s	z	B_1				
UKF305;H2305	20	110	80	16	13	29	16	37	35	M14	UK305;H2305	F305	1.2
UKF305;HE2305	3/4	4-11/32	3-5/32	5/8	1/2	1-5/32	5/8	1-29/64	1.378	1/2	UK305;HE2305		
UKF306;H2306	25	125	95	18	15	32	16	40.5	38	M14	UK306;H2306	F306	1.6
UKF306;HS2306	7/8	4-29/32	3-47/64	45/64	19/32	1-1/4	5/8	2-19/32	1.496	1/2	UK306;HS2306		
UKF306;HE2306	1										UK306;HE2306		
UKF307;H2307	30	135	100	20	16	36	19	44.5	43	M16	UK307;H2307	F307	2.0
UKF307;HS2307	1-1/8	5-5/16	3-15/16	25/32	5/8	1-13/32	3/4	2-3/4	1.693	5/8	UK307;HS2307		
UKF308;H2308	35	150	112	23	17	40	19	50	46	M16	UK308;H2308	F308	2.3
UKF308;HE2308	1-1/4	5-29/32	4-13/32	29/32	21/32	1-9/16	3/4	2-31/32	1.811	5/8	UK308;HE2308		
UKF308;HS2308	1-3/8										UK308;HS2308		
UKF309;H2309	40	160	125	25	18	44	19	54.5	50	M16	UK309;H2309	F309	2.7
UKF309;HA2309	1-7/16										UK309;HA2309		
UKF309;HE2309	1-1/2	6-6/16	4-59/64	63/64	23/32	1-23/32	3/4	2-9/64	1.969	5/8	UK309;HE2309		
UKF309;HS2309	1-5/8										UK309;HS2309		
UKF310;H2310	45	175	132	28	19	48	23	60	55	M20	UK310;H2310	F310	3.6
UKF310;HS2310	1-5/8										UK310;HS2310		
UKF310;HA2310	1-11/16	6-7/8	5-13/64	1-7/64	3/4	1-7/8	29/32	2-23/64	2.165	3/4	UK310;HA2310		
UKF310;HE2310	1-3/4										UK310;HE2310		
UKF311;H2311	50	185	140	30	20	52	23	63.5	59	M20	UK311;H2311	F311	4.6
UKF311;HS2311	1-7/8										UK311;HS2311		
UKF311;HA2311	1-15/16	7-9/32	5-33/64	1-3/16	25/32	2-1/16	29/32	2-1/2	2.323	3/4	UK311;HA2311		
UKF311;HE2311	2										UK311;HE2311		
UKF312;H2312	55	195	150	33	22	56	23	69	62	M20	UK312;H2312	F312	5.5
UKF312;HS2312	2-1/8	7-11/16	5-29/32	1-19/64	7/8	2-7/32	29/32	2-23/32	2.441	3/4	UK312;HS2312		
UKF313;H2313	60	208	166	33	22	58	23	71	65	M20	UK313;H2313	F313	6.0
UKF313;HA2313	2-3/16										UK313;HE2313		
UKF313;HE2313	2-1/4	8-3/16	6-17/32	1-19/64	7/8	2-9/32	29/32	2-51/64	2.559	3/4	UK313;HE2313		
UKF313;HS2313	2-3/8										UK313;HE2313		
UKF315;H2315	65	236	184	39	25	66	25	81	73	M22	UK315;H2315	F315	8.1
UKF315;HA2315	2-7/16	9-9/32	7-1/4	1-17/32	63/64	2-19/32	63/64	3-3/16	2.874	7/8	UK315;HA2315		
UKF315;HE2315	2-1/2										UK315;HE2315		
UKF316;H2316	70	250	196	38	27	68	31	83.5	78	M27	UK316;H2316	F316	9.5
UKF316;HA2316	2-11/16	9-27/32	7-23/32	1-1/2	1-1/16	2-11/16	1-7/32	3-9/32	3.071	1	UK316;HA2316		
UKF316;HE2316	2-3/4										UK316;HE2316		
UKF317;H2317	75	260	204	44	27	74	31	92	82	M27	UK317;H2317	F317	10.4
UKF317;HA2317	2-15/16	10-1/4	8-1/32	1-47/64	1-1/16	2-29/32	1-7/32	3-5/8	3.228	1	UK317;HA2317		
UKF317;HS2317	3										UK317;HS2317		
UKF318;H2318	80	280	216	44	30	76	35	93.5	86	M30	UK318;H2318	F318	11.4
UKF318;HA2318	3-3/16	11-1/32	8-1/2	1-47/64	1-3/16	3	1-3/8	3-11/16	3.386	1-1/8	UK318;HA2318		
UKF319;H2319	85	290	228	59	30	94	35	111	90	M30	UK319;H2319	F319	21.9
UKF319;HA2319	3-5/16	11-13/32	8-31/32	2-21/64	1-3/16	3-11/16	1-3/8	4-3/8	3.543	1-1/8	UK319;HA2319		
UKF320;H2320	90	310	242	59	32	94	38	115	97	M33	UK320;H2320	F320	25.4
UKF320;HA2320	3-7/16	12-7/32	9-17/32	2-21/64	1-1/4	3-11/16	1-1/2	4-17/32	3.814	1-1/4	UK320;HA2320		
UKF322;H2322	100	340	266	60	35	96	41	121	105	M36	UK322;H2322	F322	35.2
UKF322;HA2322	3-15/16	13-3/8	10-15/32	3-23/64	1-3/8	3-25/32	1-39/64	4-49/64	4.134	1-3/8	UK322;HA2322		
UKF324;H2324	110	370	290	65	40	110	41	130	112	M36	UK324;H2324	F324	47.6
UKF324;HA2324	4-3/16	14-9/16	11-27/64	2-9/16	1-9/16	4-11/32	1-39/64	5-1/8	4.410	1-3/8	UK324;HA2324		
UKF326;H2326	115	410	320	65	45	115	41	134	121	M36	UK326;H2326	F326	65.3
UKF326;HA2326	4-7/16	16-5/32	12-19/32	2-9/6	1-25/32	4-17/32	1-39/64	5-9/32	4.764	1-3/8	UK326;HA2326		
UKF328;H2328	125	450	350	75	55	125	41	148	131	M36	UK328;H2328	F328	93.4
UKF328;HA2328	4-15/16	17-23/32	13-25/32	2-61/64	2-5/32	4-29/32	1-39/64	5-53/64	5.158	1-3/8	UK328;HA2328		

Flange Units (Square)

UCFU2 (Normal-duty)

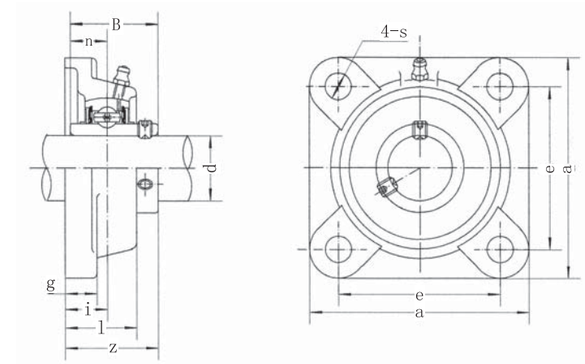

Unit No.	Dimensions mm / in.										Bolt Size mm / inch	Bearing No.	Housing No.	Weight (kg)
	d	a	e	i	g	l	s	z	B	n				
UCSFU203	17	76	54	15	11	25.5	12	30.9	27.4	11.5	M10	UCS203	FU203	0.39
		3	2-1/8	19/32	7/16	1	15/32	1-7/32	1.0787	0.453	3/8			
UCFU203	17	86	63.5	19	15	29.5	12	37.3	31	12.7	M10	UC203	FU204	0.65
UCFU203-11	11/16											UC203-11		
UCFU204	20	3-3/8	2-1/2	3/4	19/32	1-5/32	15/32	1-15/32	1.2205	0.500	3/8	UC204	FU204	0.63
UCFU204-12	3/4											UC204-12		
UCFU205	25	93	70	19	15	30	12	38.8	34.1	14.3	M10	UC205	FU205	0.75
UCFU205-13	13/16											UC205-13		
UCFU205-14	7/8	3-21/32	2-3/4	3/4	19/32	1-3/16	15/32	1-17/32	1.3425	0.563	3/8	UC205-14		
UCFU205-15	15/16											UC205-15		
UCFU205-16	1											UC205-16		
UCFU206	30	106	82.5	20	16	32.5	12	42.2	38.1	15.9	M10	UC206	FU206	1.09
UCFU206-17	1-1/16											UC206-17		
UCFU206-18	1-1/8	4-11/64	3-1/4	25/32	5/8	1-9/32	15/32	1-21/32	1.5000	0.626	3/8	UC206-18		
UCFU206-19	1-3/16											UC206-19		
UCFU206-20	1-1/4											UC206-20		
UCFU207	35	116	92	21	17	35	14	46.4	42.9	17.5	M12	UC207	FU207	1.36
UCFU207-20	1-1/4											UC207-20		
UCFU207-21	1-5/16	4-9/16	3-5/8	53/64	43/64	1-3/8	35/64	1-53/64	1.6890	0.689	7/16	UC207-21		
UCFU207-22	1-3/8											UC207-22		
UCFU207-23	1-7/16											UC207-23		
UCFU208	40	129	101.5	24	17	39	14	54.2	49.2	19	M12	UC208	FU208	1.81
UCFU208-24	1-1/2	5-5/64	4	15/16	43/64	1-17/32	35/64	2-1/8	1.9370	0.748	7/16	UC208-24		
UCFU208-25	1-9/16											UC208-25		
UCFU209	45	135	105	24	18	40	16	54.2	49.2	19	M14	UC209	FU209	2.15
UCFU209-26	1-5/8											UC209-26		
UCFU209-27	1-11/16	5-5/16	4-9/64	15/16	23/32	1-37/64	5/8	2-1/8	1.9370	0.748	1/2	UC209-27		
UCFU209-28	1-3/4											UC209-28		
UCFU210	50	143	111	28	20	45	18	60.6	51.6	19	M16	UC210	FU210	2.51
UCFU210-29	1-13/16											UC210-29		
UCFU210-30	1-7/8	5-5/8	4-3/8	1-3/32	25/32	1-49/64	23/32	2-25/64	2.0315	0.748	5/8	UC210-30		
UCFU210-31	1-15/16											UC210-31		
UCFU210-32	2											UC210-32		
UCFU211	55	162	130	31	21	49	18	64.4	55.6	22.2	M16	UC211	FU211	3.42
UCFU211-32	2											UC211-32		
UCFU211-33	2-1/16	6-3/8	5-1/8	1-7/32	53/64	1-59/64	23/32	2-17/32	2.1890	0.874	5/8	UC211-33		
UCFU211-34	2-1/8											UC211-34		
UCFU211-35	2-3/16											UC211-35		
UCFU212	60	175	143	34	22	53.5	18	73.7	65.1	25.4	M16	UC212	FU212	4.26
UCFU212-36	2-1/4											UC212-36		
UCFU212-37	2-5/16	6-57/64	5-5/8	1-11/32	55/64	1-7/64	23/32	2-29/32	2.5630	1.000	5/8	UC212-37		
UCFU212-38	2-3/8											UC212-38		
UCFU212-39	2-7/16											UC212-39		
UCFU213	65	184	149	38	22	58	18	77.7	65.1	25.4	M16	UC213	FU213	5.44
UCFU213-40	2-1/2	7-1/4	5-55/64	1-1/2	55/64	2-9/32	23/32	3-1/16	2.5630	1.000	5/8	UC213-40		
UCFU213-41	2-9/16											UC213-41		
UCFU214	70	188	152	38	23	59	18	82.4	74.6	30.2	M16	UC214	FU214	6.00
UCFU214-42	1-5/8							3-1/4				UC214-42		
UCFU214-43	1-11/16	7-13/32	5-63/64	1-1/2	29/32	2-21/64	23/32	31/4	2.9370	1.189	5/8	UC214-43		
UCFU214-44	1-3/4											UC214-44		
UCFU215	75	200	159	41	24	62	18	85.5	77.8	33.3	M16	UC215	FU215	6.83
UCFU215-45	2-13/16											UC215-45		
UCFU215-46	2-7/8	7-7/8	6-17/64	1-39/64	15/16	2-7/16	23/32	3-23/64	3.0630	1.311	5/8	UC215-46		
UCFU215-47	2-15/16											UC215-47		
UCFU215-48	3											UC215-48		

HCFU2 (Normal-duty)

Flange Units (Square)

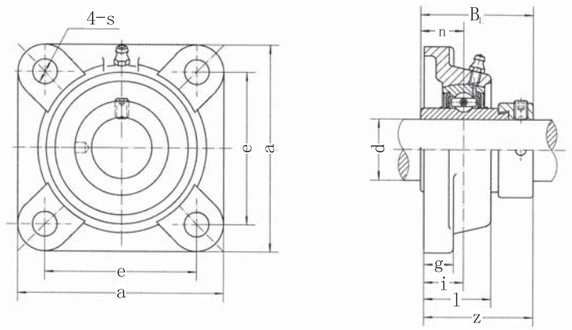

Unit No.	Dimensions mm in. d	a	e	i	g	l	s	z	B1	n	Bolt Size mm inch	Bearing No.	Housing No.	Weight (kg)
HCFU203	17	86	63.5	19	15	29.5	12	45.6	43.7	17.1	M10	HC203	FU204	0.70
HCFU203-11	11/16	3-3/8	2-1/2	3/4	19/32	1-5/32	15/32	1-51/64	1.720	0.673	3/8	HC203-11		
HCFU204	20											HC204	FU204	0.68
HCFU204-12	3/4											HC204-12		
HCFU205	25	93	70	19	15	30	12	45.9	44.1	17.5	M10	HC205	FU205	0.81
HCFU205-13	13/16	3-21/32	2-3/4	3/4	19/32	1-3/16	15/32	1-13/16	1.748	0.689	3/8	HC205-13		
HCFU205-14	7/8											HC205-14		
HCFU205-15	15/16											HC205-15		
HCFU205-16	1											HC205-16		
HCFU206	30	106	82.5	20	16	32.5	12	50.1	48.4	18.3	M10	HC206	FU206	1.16
HCFU206-17	1-1/16	4-11/64	3-1/4	25/32	5/8	1-9/32	15/32	1-31/32	1.906	0.720	3/8	HC206-17		
HCFU206-18	1-1/8											HC206-18		
HCFU206-19	1-3/16											HC206-19		
HCFU206-20	1-1/4											HC206-20		
HCFU207	35	116	92	21	17	35	14	53.3	51.1	18.8	M12	HC207	FU207	1.50
HCFU207-20	1-1/4	4-9/16	3-5/8	53/64	43/64	1-3/8	35/64	2-3/32	2.012	0.740	7/16	HC207-20		
HCFU207-21	1-5/16											HC207-21		
HCFU207-22	1-3/8											HC207-22		
HCFU207-23	1-7/16											HC207-23		
HCFU208	40	129	101.5	24	17	39	14	58.9	56.3	21.4	M12	HC208	FU208	1.95
HCFU208-24	1-1/2	5-5/64	4	15/16	43/64	1-17/32	35/64	2-5/16	2.217	0.843	7/16	HC208-24		
HCFU208-25	1-9/16											HC208-25		
HCFU209	45	135	105	24	18	40	16	58.9	56.3	21.4	M14	HC209	FU209	2.27
HCFU209-26	1-5/8	5-5/16	4-9/64	15/16	23/32	1-37/64	5/8	2-5/16	2.217	0.843	1/2	HC209-26		
HCFU209-27	1-11/16											HC209-27		
HCFU209-28	1-3/4											HC209-28		
HCFU210	50	143	111	28	20	45	18	66.1	62.7	24.6	M16	HC210	FU210	2.71
HCFU210-29	1-13/16	5-5/8	4-3/8	1-3/32	25/32	1-49/64	23/32	2-39/64	2.469	0.969	5/8	HC210-29		
HCFU210-30	1-7/8											HC210-30		
HCFU210-31	1-15/16											HC210-31		
HCFU210-32	2											HC210-32		
HCFU211	55	162	130	31	21	49	18	74.6	71.4	27.8	M16	HC211	FU211	3.70
HCFU211-32	2	6-3/8	5-1/8	1-7/32	53/64	1-59/64	23/32	2-15/16	2.811	1.094	5/8	HC211-32		
HCFU211-33	2-1/16											HC211-33		
HCFU211-34	2-1/8											HC211-34		
HCFU211-35	2-3/16											HC211-35		
HCFU212	60	175	143	34	22	53.5	18	80.8	77.8	31	M16	HC212	FU212	4.59
HCFU212-36	2-1/4	6-57/64	5-5/8	1-11/32	55/64	1-7/64	23/32	3-3/16	3.063	1.220	5/8	HC212-36		
HCFU212-37	2-5/16											HC212-37		
HCFU212-38	2-3/8											HC212-38		
HCFU212-39	2-7/16											HC212-39		
HCFU213	65	184	149	38	22	58	18	89.6	85.7	34.1	M16	HC213	FU213	5.99
HCFU213-40	2-1/2	7-1/4	5-55/64	1-1/2	55/64	2-9/32	23/32	3-17/32	3.374	1.343	5/8	HC213-40		
HCFU213-41	2-9/16											HC213-41		
HCFU214	70	188	152	38	23	59	18	89.6	85.7	34.1	M16	HC214	FU214	6.39
HCFU214-42	2-3/8	7-13/32	5-63/64	1-1/2	29/32	2-21/64	23/32	3-17/32	3.374	1.343	5/8	HC214-42		
HCFU214-43	2-11/16											HC214-43		
HCFU214-44	2-3/4											HC214-44		
HCFU215	75	200	159	41	24	62	18	95.8	92.1	37.3	M16	HC215	FU215	7.32
HCFU215-45	2-13/16	7-7/8	6-17/64	1-39/64	15/16	2-7/16	23/32	3-49/64	3.626	1.469	5/8	HC215-45		
HCFU215-46	2-7/8											HC215-46		
HCFU215-47	2-15/16											HC215-47		
HCFU215-48	3											HC215-48		

Flange Cartridge Units

UCFC2 (Normal-duty)

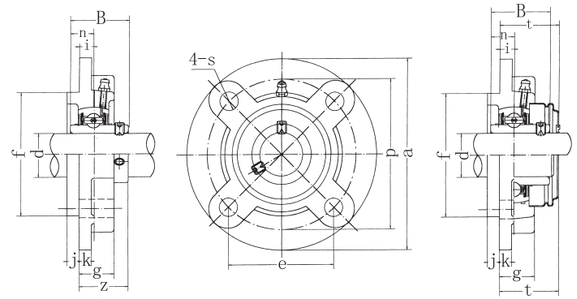

UCFC-C1(D1)

Unit No.	Dimensions mm in. d	a	p	e	i	S	j	k	g	f	z	t	B	n	Bolt Size mm inch	Bearing No.	Housing No.	Weight (kg)
UCFC201	12	100	78	55.1	10	12	5	7	20.5	62	28.3	32.5	31	12.7	M10	UC201	FC204	0.73
UCFC201-8	1/2	3-15/16	3-5/64	2-11/64	25/64	15/32	13/64	9/32	13/16	2.4409	1-1/8	1-9/32	1.2205	0.500	3/8	UC201-8		0.72
UCFC202	15	100	78	55.1	10	12	5	7	20.5	62	28.3	32.5	31	12.7	M10	UC202	FC204	0.72
UCFC202-9	9/16	3-15/16	3-5/64	2-11/64	25/64	15/32	13/64	9/32	13/16	2.4409	1-1/8	1-9/32	1.2205	0.500	3/8	UC202-9		0.72
UCFC202-10	5/8															UC202-10		0.72
UCFC203	17	100	78	55.1	10	12	5	7	20.5	62	28.3	32.5	31	12.7	M10	UC203	FC204	0.71
UCFC203-11	11/16	3-15/16	3-5/64	2-11/64	25/64	15/32	13/64	9/32	13/16	2.4409	1-1/8	1-9/32	1.2205	0.500	3/8	UC203-11		0.70
UCFC204	20	100	78	55.1	10	12	5	7	20.5	62	28.3	32.5	31	12.7	M10	UC204	FC204	0.69
UCFC204-12	3/4	3-15/16	3-5/64	2-11/64	25/64	15/32	13/64	9/32	13/16	2.4409	1-1/8	1-9/32	1.2205	0.500	3/8	UC204-12		0.69
UCFC205	25	115	90	63.6	10	12	6	7	21	70	29.8	34	34.1	14.3	M10	UC205	FC205	1.00
UCFC205-13	13/16	4-17/32	3-35/64	2-1/2	25/64	15/32	15/64	9/32	53/64	2.7559	1-11/64	1-11/32	1.3425	0.563	3/8	UC205-13		1.04
UCFC205-14	7/8															UC205-14		1.03
UCFC205-15	15/16															UC205-15		1.01
UCFC205-16	1															UC205-16		1.00
UCFC206	30	125	100	70.7	10	12	8	8	23	80	32.2	36.5	38.1	15.9	M10	UC206	FC206	1.30
UCFC206-17	1-1/16	4-59/64	3-15/16	2-25/32	25/64	15/32	5/16	5/16	29/32	3.1496	1-17/64	1-7/16	1.5000	0.626	3/8	UC206-17		1.31
UCFC206-18	1-1/8															UC206-18		1.32
UCFC206-19	1-3/16															UC206-19		1.30
UCFC206-20	1-1/4															UC206-20		1.29
UCFC207	35	135	110	77.8	11	14	8	9	26	90	36.4	41	42.9	17.5	M12	UC207	FC207	1.81
UCFC207-20	1-1/4	5-5/16	4-21/64	3-1/16	7/16	35/64	5/16	23/64	1-1/32	3.5433	1-7/16	1-5/8	1.6890	0.689	7/16	UC207-20		1.87
UCFC207-21	1-5/16															UC207-21		1.84
UCFC207-22	1-3/8															UC207-22		1.81
UCFC207-23	1-7/16															UC207-23		1.78
UCFC208	40	145	120	84.8	11	14	10	9	26	100	41.2	45.5	49.2	19	M12	UC208	FC208	2.14
UCFC208-24	1-1/2	5-45/64	4-23/32	3-11/32	7/16	35/64	25/64	23/64	1-1/32	3.9370	1-5/8	1-51/64	1.9370	0.748	7/16	UC208-24		2.18
UCFC208-25	1-9/16															UC208-25		2.15
UCFC209	45	160	132	93.3	10	16	12	14	26	105	40.2	44.5	49.2	19	M14	UC209	FC209	2.68
UCFC209-26	1-5/8	6-19/64	5-13/64	3-43/64	25/64	5/8	15/32	35/64	1-1/32	4.1339	1-37/64	1-3/4	1.9370	0.748	1/2	UC209-26		2.78
UCFC209-27	1-11/16															UC209-27		2.74
UCFC209-28	1-3/4															UC209-28		2.70
UCFC210	50	165	138	97.6	10	16	12	14	28	110	42.6	47.5	51.6	19	M14	UC210	FC210	2.90
UCFC210-29	1-13/16	6-1/2	5-7/16	3-27/32	25/64	5/8	15/32	35/64	1-7/64	4.3307	1-11/16	1-7/8	2.0315	0.748	1/2	UC210-29		3.02
UCFC210-30	1-7/8															UC210-30		2.97
UCFC210-31	1-15/16															UC210-31		2.92
UCFC210-32	2															UC210-32		2.88
UCFC211	55	185	150	106.1	13	19	12	15	31	125	46.4	51	55.6	22.2	M16	UC211	FC211	4.01
UCFC211-32	2	7-9/32	5-29/32	4-3/16	33/64	3/4	15/32	19/32	1-7/32	4.9213	1-53/64	2-1/64	2.1890	0.874	5/8	UC211-32		4.16
UCFC211-33	2-1/16															UC211-33		4.10
UCFC211-34	2-1/8															UC211-34		4.05
UCFC211-35	2-3/16															UC211-35		3.99
UCFC212	60	195	160	113.1	17	19	12	15	36	135	56.7	61.5	65.1	25.4	M16	UC212	FC212	4.94
UCFC212-36	2-1/4	7-11/16	6-19/64	4-29/64	43/64	3/4	15/32	19/32	1-27/64	5.3150	2-15/64	2-27/64	2.5630	1.000	5/8	UC212-36		5.07
UCFC212-37	2-5/16															UC212-37		4.99
UCFC212-38	2-3/8															UC212-38		4.92
UCFC212-39	2-7/16															UC212-39		4.85
UCFC213	65	205	170	120.2	16	19	14	15	36	145	55.7	60.5	65.1	25.4	M16	UC213	FC213	5.65
UCFC213-40	2-1/2	8-5/64	6-11/16	4-47/64	5/8	3/4	35/64	19/32	1-27/64	5.5118	1-3/16	2-25/64	2.5630	1.000	5/8	UC213-40		5.74
UCFC213-41	2-9/16															UC213-41		5.65
UCFC214	70	215	177	125.1	17	19	14	18	40	150	61.4		74.6	30.2	M16	UC214	FC214	6.95
UCFC214-42	2-5/8	8-15/32	6-31/32	4-59/64	43/64	3/4	35/64	23/32	1-37/64	5.9055	1-13/32		2.9370	1.189	5/8	UC214-42		7.16
UCFC214-43	2-11/16															UC214-43		7.06
UCFC214-44	2-3/4															UC214-44		6.96
UCFC215	75	220	184	130.1	18	19	16	18	40	160	62.5		77.8	33.3	M16	UC215	FC215	7.56
UCFC215-45	2-13/16	8-21/32	7-1/4	5-1/8	23/32	3/4	5/8	23/32	1-37/64	6.2992	2-15/32		3.0630	1.311	5/8	UC215-45		7.81
UCFC215-46	2-7/8															UC215-46		7.70
UCFC215-47	2-15/16															UC215-47		7.59
UCFC215-48	3															UC215-48		7.47
UCFC216	80	240	200	141.4	18	23	16	18	42	170	67.3		82.6	33.3	M20	UC216	FC216	9.15
UCFC216-49	3-1/16	9-29/64	7-7/8	5-9/16	23/32	29/32	5/8	23/32	1-21/32	6.6929	2-21/32		3.2520	1.311	3/4	UC216-49		9.28
UCFC216-50	3-1/8															UC216-50		9.20
UCFC216-51	3-3/16															UC216-51		9.07
UCFC217	85	250	208	147.1	18	23	18	20	45	180	69.6		85.7	34.1	M20	UC217	FC217	10.81
UCFC217-52	3-1/4	9-27/32	8-3/16	5-51/64	23/32	29/32	23/32	25/32	1-25/32	7.0866	2-3/4		3.3740	1.343	3/4	UC217-52		11.03
UCFC217-53	3-5/16															UC217-53		10.89
UCFC217-55	3-7/16															UC217-55		10.60
UCFC218	90	265	220	155.5	22	23	18	20	50	190	78.3		96	39.7	M20	UC218	FC218	12.96
UCFC218-56	3-1/2	10-7/16	8-21/32	6-1/8	55/64	29/32	23/32	25/32	1-31/32	7.4803	3-3/32		3.7795	1.5630	3/4	UC218-56		13.07

HCFC2 (Normal-duty)

Flange Cartridge Units

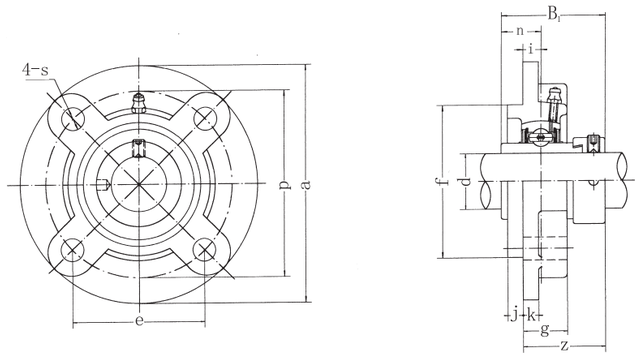

Unit No.	Dimensions mm in.													Bolt Size mm inch	Bearing No.	Housing No.	Weight (kg)
	d	a	p	e	i	s	j	k	g	f	z	B1	n				
HCFC204	20	100	78	55.1	10	12	5	7	20.5	62	36.6	43.7	17.1	M10	HC204	FC204	0.76
HCFC204-12	3/4	3-15/16	3-5/64	2-11/64	25/64	15/32	13/64	9/32	13/16	2.4409	1-7/16	1.720	0.673	3/8	HC204-12		0.76
HCFC205	25	115	90	63.6	10	12	6	7	21	70	36.9	44.4	17.5	M10	HC205	FC205	1.07
HCFC205-13	13/16														HC205-13		1.12
HCFC205-14	7/8	4-17/32	3-35/64	2-1/2	25/64	15/32	15/64	9/32	53/64	2.7559	1-29/64	1.748	0.689	3/8	HC205-14		1.11
HCFC205-15	15/16														HC205-15		1.09
HCFC205-16	1														HC205-16		1.07
HCFC206	30	125	100	70.7	10	12	8	8	23	80	40.1	48.4	18.3	M10	HC206	FC206	1.43
HCFC206-17	1-1/16														HC206-17		1.48
HCFC206-18	1-3/8	4-59/64	3-15/16	2-25/32	25/64	15/32	5/16	5/16	29/32	3.1496	1-37/64	1.906	0.720	3/8	HC206-18		1.45
HCFC206-19	1-3/16														HC206-19		1.43
HCFC206-20	1-1/4														HC206-20		1.40
HCFC207	35	135	110	77.8	11	14	8	9	26	90	43.3	51.1	18.8	M12	HC207	FC207	1.93
HCFC207-20	1-1/4														HC207-20		2.00
HCFC207-21	1-5/16	1-5/16	4-21/64	3-1/16	7/16	35/64	5/16	23/64	1-1/32	3.5433	1-45/64	2.012	0.740	7/16	HC207-21		1.96
HCFC207-22	1-3/8														HC207-22		1.93
HCFC207-23	1-7/16														HC208-23		1.87
HCFC208	40	145	120	84.8	11	14	10	9	26	100	45.9	56.3	21.4	M12	HC208	FC208	2.29
HCFC208-24	1-1/2	5-45/64	4-23/32	3-11/32	7/16	35/64	25/64	23/64	1-1/32	3.9370	1-13/16	2.217	0.843	7/16	HC208--24		2.34
HCFC208-25	1-9/16														HC208-25		2.30
HCFC209	45	160	132	93.3	10	16	12	14	26	105	44.9	56.3	21.4	M14	HC209	FC209	2.85
HCFC209-26	1-5/8														HC209-26		2.96
HCFC209-27	1-11/16	6-19/64	5-13/64	3-43/64	25/64	5/8	15/32	35/64	1-1/32	4.1339	1-49/64	2.217	0.843	1/2	HC209-27		2.91
HCFC209-28	1-3/4														HC209-28		2.87
HCFC210	50	165	138	97.6	10	16	12	14	28	110	48.1	62.7	24.6	M14	HC210	FC210	3.09
HCFC210-29	1-13/16														HC210-29		3.24
HCFC210-30	1-7/8	6-1/2	5-7/16	3-27/32	25/64	5/8	15/32	35/64	1-7/64	4.3307	1-57/64	2.469	0.969	1/2	HC210-30		3.18
HCFC210-31	1-15/16														HC210-31		3.12
HCFC210-32	2														HC210-32		3.06
HCFC211	55	185	150	106.1	13	19	12	15	31	125	56.6	71.4	27.8	M16	HC211	FC211	4.22
HCFC211-32	2														HC211-32		4.42
HCFC211-33	2-1/16	7-9/32	5-29/32	4-3/16	33/64	3/4	15/32	19/32	1-7/32	4.9213	2-15/64	2.811	1.094	5/8	HC211-33		4.34
HCFC211-34	2-1/8														HC211-34		4.27
HCFC211-35	2-3/16														HC211-35		4.19
HCFC212	60	195	160	113.1	17	19	12	15	36	135	63.8	77.8	31	M16	HC212	FC212	5.28
HCFC212-36	2-1/4														HC212-36		5.44
HCFC212-37	2-5/16	7-11/16	6-19/64	4-29/64	43/64	3/4	15/32	19/32	1-27/64	5.3150	2-33/64	3.063	1.220	5/8	HC212-37		5.35
HCFC212-38	2-3/8														HC212-38		5.30
HCFC212-39	2-7/16														HC212-39		5.17
HCFC213	65	205	170	120.2	16	19	14	15	36	145	67.6	85.7	34.1	M16	HC213	FC213	6.21
HCFC213--40	2-1/2	8-5/64	6-11/16	4-47/64	5/8	3/4	35/64	19/32	1-27/64	5.5118	2-21/32	3.374	1.343	5/8	HC213-40		6.31
HCFC213-41	2-9/16														HC213-41		6.20
HCFC214	70	215	177	125.1	17	19	14	18	40	150	68.6	85.7	34.1	M16	HC214	FC214	7.45
HCFC214-42	2-3/8														HC214-42		7.69
HCFC214-43	2-11/16	8-15/32	6-31/32	4-59/64	43/64	3/4	35/64	23/32	1-37/64	5.9055	2-45/64	3.374	1.343	5/8	HC214-43		7.58
HCFC214-44	2-3/4														HC214-44		7.46
HCFC215	75	220	184	130.1	18	19	16	18	40	160	72.8	92.1	37.3	M16	HC215	FC215	8.19
HCFC215-45	2-13/16														HC215-45		8.49
HCFC215-46	2-7/8	8-21/32	7-1/4	5-1/8	23/32	3/4	5/8	23/32	1-37/64	6.2992	2-7/8	3.626	1.469	5/8	HC215-46		8.36
HCFC215-47	2-15/16														HC215-47		8.23
HCFC215-48	3														HC215-48		8.09

Flange Cartridge Units
(with adapter mounted)

UKFC2 (Normal-duty)

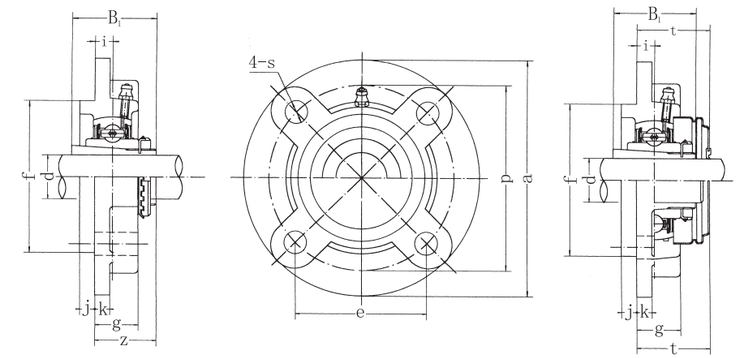

UCFC-C1(D1)

Unit No.	Dimensions mm in													Bolt Size mm inch	Bearing No.	Housing No.	Weight (kg)
	d	a	p	e	i	s	j	k	g	f	z	t	B1				
UKFC205;H2305	20	115	90	63.6	10	12	6	7	21	70	29.5	34	35	M10	UK205;H2305	FC205	1.05
UKFC205;HE2305	3/4	4-17/32	3-35/64	2-1/2	15/64	15/32	15/64	9/32	53/64	2.7559	1-5/32	1-11/32	1.378	3/8	UK205;HE2305		
UKFC206;H2306	25	125	100	70.7	10	12	8	8	23	80	31	36.5	38	M10	UK206;H2306	FC206	1.34
UKFC206;HS2306	7/8	4-59/64	3-15/16	2-25/32	25/64	15/32	5/16	5/16	29/32	3.1496	1-7/32	1-7/16	1.496	3/8	UK206;HS2306		
UKFC206;HE2306	1														UK206;HE2306		
UKFC207;H2307	30	135	110	77.8	11	14	8	9	26	90	33.5	41	43	M12	UK207;H2307	FC207	1.90
UKFC207;HS2307	1-1/8	5-5/16	4-21/64	3-1/16	7/16	35/64	5/16	23/64	1-1/32	3.5433	1-5/16	1-5/8	1.693	7/16	UK207;HS2307		
UKFC208;H2308	35	145	120	84.8	11	14	10	9	26	100	35.5	45.5	46	M12	UK208;H2308	FC208	2.24
UKFC208;HE2308	1-1/4	5-45/64	4-23/32	3-11/32	7/16	35/64	25/64	23/64	1-1/32	3.9370	1-25/64	1-51/64	1.811	7/16	UK208;HE2308		
UKFC208;HS2308	1-3/8														UK208;HS2308		
UKFC209;H2309	40	160	132	93.3	10	16	12	14	26	105	36	44.5	50	M14	UK209;H2309	FC209	2.83
UKFC209;HA2309	1-7/16														UK209;HA2309		
UKFC209;HE2309	1-1/2	6-19/64	5-13/64	3-43/64	25/64	5/8	15/32	35/64	1-1/32	4.1339	1-27/64	1-3/4	1.969	1/2	UK209;HE2309		
UKFC209;HS2309	1-5/8														UK209;HS2309		
UKFC210;H2310	45	165	138	97.6	10	16	12	14	28	110	37.5	47.5	55	M14	UK210;H2310	FC210	3.07
UKFC210;HS2310	1-5/8														UK210;HS2310		
UKFC210;HA2310	1-11/16	6-1/2	5-7/16	3-27/32	25/64	5/8	15/32	35/64	1-7/64	4.3307	1-15/32	1-7/8	2.165	1/2	UK210;HA2310		
UKFC210;HE2310	1-3/4														UK210;HE2310		
UKFC211;H2311	50	185	150	106.1	13	19	12	15	31	125	41.5	51	59	M16	UK211;H2311	FC211	4.16
UKFC211;HS2311	1-7/8														UK211;HS2311		
UKFC211;HA2311	1-15/16	7-9/32	5-29/32	4-3/16	33/64	3/4	15/32	19/32	1-7/32	4.9213	1-41/64	2-1/64	2.323	5/8	UK211;HA2311		
UKFC211;HE2311	2														UK211;HE2311		
UKFC212;H2312	55	195	160	113.1	17	19	12	15	36	135	48	61.5	62	M16	UK212;H2312	FC212	4.99
UKFC212;HS2312	2-1/8	7-11/16	6-19/64	4-29/64	43/64	3/4	15/32	19/32	1-27/64	5.3150	1-57/64	2-27/64	2.441	5/8	UK212;HS2312		
UKFC213;H2313	60	205	170	120.2	16	19	14	15	36	145	49	60.5	65	M16	UK213;H2313	FC213	5.56
UKFC213;HA2313	2-3/16														UK213;HA2313		
UKFC213;HE2313	2-1/4	8-5/64	6-11/16	4-47/64	5/8	3/4	35/64	19/32	1-27/64	5.5118	1-15/16	2-25/64	2.559	5/8	UK213;HE2313		
UKFC213;HS2313	2-3/8														UK213;HS2313		
UKFC215;H2315	65	220	184	130.1	18	19	16	18	40	160	53.5		73	M16	UK215;H2315	FC215	7.67
UKFC215;HA2315	2-7/16	8-21/32	7-1/4	5-1/8	23/32	3/4	5/8	23/32	1-37/64	6.2992	2-7/64		2.874	5/8	UK215;HA2315		
UKFC215;HE2315	2-1/2														UK215;HE2315		
UKFC216;H2316	70	240	200	141.4	18	23	16	18	42	170	57		78	M20	UK216;H2316	FC216	9.41
UKFC216;HA2316	2-11/16	9-29/64	7-7/8	5-9/16	23/32	29/32	5/8	23/32	1-21/32	6.6929	2-1/4		3.071	3/4	UK216;HA2316		
UKFC216;HE2316	2-3/4														UK216;HE2316		
UKFC217;H2317	75	250	208	147.1	18	23	18	20	45	180	59		82	M20	UK217;H2317	FC217	11.23
UKFC217;HA2317	2-15/16	9-27/32	8-3/16	5-51/64	23/32	29/32	23/32	25/32	1-25/32	7.0866	2-21/64		3.228	3/4	UK217;HA2317		
UKFC217;HE2317	3														UK217;HE2317		
UKFC218;H2318	80	265	220	155.5	22	23	18	20	50	190	64.5		86	M20	UK218;H2318	FC218	13.34
UKFC218;HA2318	3-3/16	10-7/16	8-21/32	6-1/8	55/64	29/32	23/32	25/32	1-31/32	7.4803	3-35/64		3.386	3/4	UK218;HA2318		

UCME2 (Normal-duty)

Flange Cartridge Units

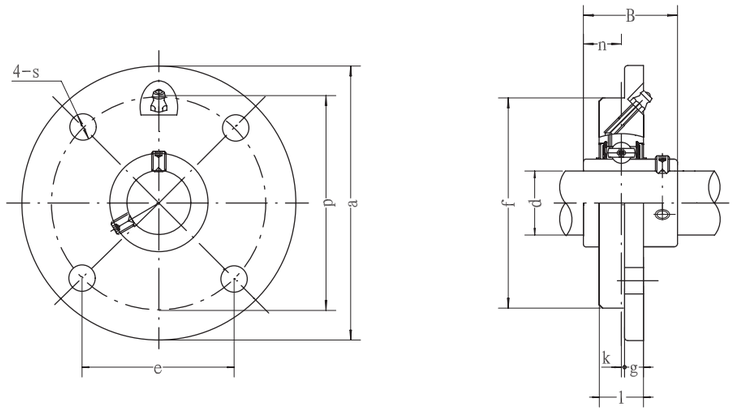

Unit No.	Dimensions mm / in.											Bolt Size mm / inch	Bearing No.	Housing No.	Weight (kg)
	d	a	p	e	s	l	k	g	f	B	n				
UCME204	20	100 3-15/16	78 3-5/64	55.1 2-11/64	9 13/64	17 43/64	0.5 1/64	8 5/16	62 2.4409	31 1.2205	12.7 0.500	M8 5/16	UC204RG	ME04	0.528
UCME205	25	115 4-17/32	90 3-35/64	63.6 2-1/2	9 13/64	19 3/4	1.5 1/16	9 13/64	70 2.7559	34.1 1.3425	14.3 0.563	M8 5/16	UC205RG	ME05	0.744
UCME206	30	125 4-59/64	100 3-15/16	70.7 2-25/32	11.5 29/64	20.5 13/16	1.5 1/16	9.5 3/8	80 3.1496	38.1 1.5000	15.9 0.626	M10 3/8	UC206RG	ME06	0.978
UCME207	35	135 5-5/16	110 4-21/64	77.8 3-1/16	11.5 29/64	20.5 13/16	0.5 1/64	10 25/64	90 3.5433	42.9 1.6890	17.5 0.689	M10 3/8	UC207RG	ME07	1.251
UCME208	40	145 5-45/64	120 4-23/32	84.8 3-11/32	11.5 29/64	23 29/32	1 3/64	11.5 29/64	100 3.9370	49.2 1.9370	19 0.748	M10 3/8	UC208RG	ME08	1.621
UCME209	45	155 6-7/64	130 5-1/8	91.9 3-5/8	14 35/64	25 63/64	2 5/64	12 15/32	105 4.1339	49.2 1.9370	19 0.748	M12 1/2	UC209RG	ME09	1.949
UCME210	50	165 6-1/2	135 5-5/16	95.5 3-47/64	14 35/64	25 63/64	0	13 33/64	110 4.3307	51.6 2.0315	19 0.748	M12 1/2	UC210RG	ME10	2.301
UCME211	55	185 7-9/32	150 5-29/32	106.1 4-3/16	18 45/64	27.5 1-5/64	0	15 19/32	125 4.9216	55.6 2.1890	22.2 0.874	M16 5/8	UC211RG	ME11	2.973
UCME212	60	195 7-11/16	160 6-19/64	113.1 4-29/64	18 45/64	29 1-9/64	-0.5 -1/64	16 5/8	135 5.3150	65.1 2.5630	25.4 1.000	M16 5/8	UC212RG	ME12	3.592
UCME213	65	205 8-5/64	170 6-11/16	120.2 4-47/64	19 3/4	29 1-9/64	-3 -1/8	18 45/64	145 5.7087	65.1 2.5630	25.4 1.000	M16 5/8	UC213RG	ME13	4.867
UCME214	70	215 8-15/32	177 6-31/32	125.1 4-59/64	18 45/64	32 1-1/4	-0.5 -1/64	18 45/64	150 5.9055	74.6 2.9370	30.2 1.189	M16 5/8	UC214RG	ME14	5.312
UCME215	75	220 8-21/32	184 7-1/4	130.1 5-1/8	18 45/64	32 1-1/4	-1 -3/64	18 45/64	160 6.2992	77.8 3.0630	33.3 1.311	M16 5/8	UC215RG	ME15	5.325
UCME216	80	220 8-21/32	184 7-1/4	130.1 5-1/8	18 45/64	32 1-1/4	-2 -5/64	18 45/64	160 6.2992	82.6 3.2520	33.3 1.311	M16 5/8	UC216RG	ME16	5.669
UCME218	90	265 10-7/16	220 8-21/32	155.5 6-1/8	23 29/32	36 1-27/64	-2 -5/64	20 25/32	190 7.4803	96 3.7795	39.7 1.5630	M20 3/4	UC218RG	ME18	9.285

Flange Cartridge Units

HCFE2 (Normal-duty)

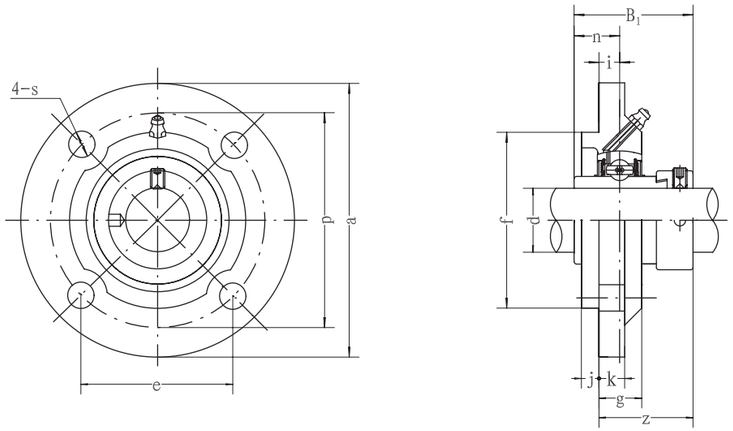

Unit No.	Dimensions mm / in.													Bolt Size mm / inch	Bearing No.	Housing No.	Weight (kg)
	d	a	p	e	i	s	j	k	g	f	z	B1	n				
HCFE205	25	115 4-17/32	92 3-5/8	65.1 2-9/16	9.5 3/8	9 13/64	3 1/8	9 23/64	19 3/4	75 2.9528	36.4 1-7/16	44.4 1.748	17.5 0.689	M8 5/16	HC205RG	FE05	0.801
HCFE206	30	127 5	105 4-9/64	74.3 2-59/64	10.5 13/32	9 13/64	3 1/8	9.5 3/8	19.5 49/64	85 3.3465	40.6 1-19/32	48.4 1.906	18.3 0.720	M8 5/16	HC206RG	FE06	1.092
HCFE207	35	135 5-5/16	110 4-21/64	77.8 3-1/16	9 13/64	11.5 29/64	4 5/32	10 25/64	18.5 47/64	90 3.5433	41.3 1-5/8	51.1 2.012	18.8 0.740	M10 3/8	HC207RG	FE07	1.349
HCFE208	40	145 5-45/64	120 4-23/32	84.8 3-11/32	11.5 29/64	11.5 29/64	4 5/32	11.5 29/64	22 55/64	100 3.9370	46.4 1-53/64	56.3 2.217	21.4 0.843	M10 3/8	HC208RG	FE08	1.736
HCFE209	45	155 6-7/64	130 5-1/8	91.9 3-5/8	11.5 29/64	14 35/64	4 5/32	12 15/32	22.5 57/64	105 4.1339	46.4 1-53/64	56.3 2.217	21.4 0.843	M12 1/2	HC209RG	FE09	2.048
HCFE210	50	165 6-1/2	136 5-23/64	96.2 3-25/32	12.5 31/64	14 35/64	4 5/32	13 33/64	23.5 59/64	115 4.5276	50.6 1-63/64	62.7 2.469	24.6 0.969	M12 1/2	HC210RG	FE10	2.453
HCFE212	60	195 7-11/16	165 6-1/2	116.7 4-19/32	17 43/64	14 35/64	4 5/32	16 5/8	29 1-9/64	140 5.5118	63.8 2-33/64	77.8 3.063	31 1.220	M12 1/2	HC212RG	FE12	3.927

UCCFC2 (Normal-duty)

Flange Cartridge Units

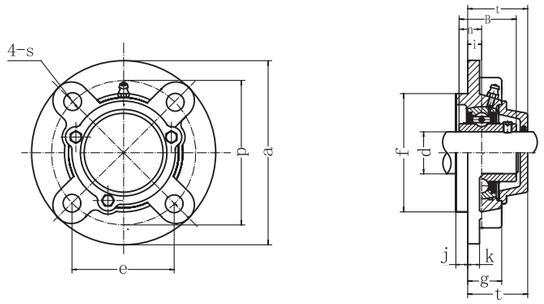

Unit No.	Dimensions mm in. d	a	p	e	i	s	j	k	g	f	t	B	n	Bolt Size mm inch	Bearing No.	Housing No.	Weight (kg)
UCCFC204	20	100	78	55.1	10	12	5	7	20.5	62	41	31	12.7	M10	UC204	CFC204	0.82
UCCFC204-12	3/4	3-15/16	3-5/64	2-11/64	25/64	15/32	13/64	9/32	13/16	2.4409	1-5/8	1.2205	0.500	3/8	UC204-12		0.82
UCCFC205	25	115	90	63.6	10	12	6	7	21	70	45	34.1	14.3	M10	UC205	CFC205	1.21
UCCFC205-13	13/16	4-17/32	3-35/64	2-1/2	25/64	15/32	15/64	9/32	53/64	2.7559	1-49/64	1.3425	0.563	3/8	UC205-13		1.25
UCCFC205-14	7/8														UC205-14		1.24
UCCFC205-15	15/16														UC205-15		1.22
UCCFC205-16	1														UC205-16		1.21
UCCFC206	30	125	100	70.7	10	12	8	8	23	80	47	38.1	15.9	M10	UC206	CFC206	1.51
UCCFC206-17	1-1/16	4-59/64	3-15/16	2-25/32	25/64	15/32	5/16	5/16	29/32	3.1496	1-27/32	1.5000	0.626	3/8	UC206-17		1.52
UCCFC206-18	1-1/8														UC206-18		1.53
UCCFC206-19	1-3/16														UC206-19		1.51
UCCFC206-20	1-1/4														UC206-20		1.50
UCCFC207	35	135	110	77.8	11	14	8	9	26	90	51	42.9	17.5	M12	UC207	CFC207	1.93
UCCFC207-20	1-1/4	5-5/16	4-21/64	3-1/16	7/16	35/64	5/16	23/64	1-1/32	3.5433	2-1/64	1.6890	0.689	7/16	UC207-20		1.99
UCCFC207-21	1-5/16														UC207-21		1.96
UCCFC207-22	1-3/8														UC207-22		1.93
UCCFC207-23	1-7/16														UC207-23		1.90
UCCFC208	40	145	120	84.8	11	14	10	9	26	100	56	49.2	19	M12	UC208	CFC208	2.38
UCCFC208-24	1-1/2	5-45/64	4-23/32	3-11/32	7/16	35/64	25/64	23/64	1-1/32	3.9370	2-13/64	1.9370	0.748	7/16	UC208-24		2.42
UCCFC208-25	1-9/16														UC208-25		2.39
UCCFC209	45	160	132	93.3	10	16	12	14	26	105	55	49.2	19	M14	UC209	CFC209	3.10
UCCFC209-26	1-5/8	6-19/64	5-13/64	3-43/64	25/64	5/8	15/32	35/64	1-1/32	4.1339	2-11/64	1.9370	0.748	1/2	UC209-26		3.20
UCCFC209-27	1-11/16														UC209-27		3.16
UCCFC209-28	1-3/4														UC209-28		3.12
UCCFC210	50	165	138	97.6	10	16	12	14	28	110	59	51.6	19	M14	UC210	CFC210	3.36
UCCFC210-29	1-13/16	6-1/2	5-7/16	3-27/32	25/64	5/8	15/32	35/64	1-7/64	4.3307	2-23/64	2.0315	0.748	1/2	UC210-29		3.48
UCCFC210-30	1-7/8														UC210-30		3.43
UCCFC210-31	1-15/16														UC210-31		3.38
UCCFC210-32	2														UC210-32		3.34
UCCFC211	55	185	150	106.1	13	19	12	15	31	125	63	55.6	22.2	M16	UC211	CFC211	4.77
UCCFC211-32	2	7-9/32	5-29/32	4-3/16	33/64	3/4	15/32	19/32	1-7/32	4.9213	2-1/64	2.1890	0.874	5/8	UC211-32		4.92
UCCFC211-33	2-1/16														UC211-33		4.86
UCCFC211-34	2-1/8														UC211-34		4.81
UCCFC211-35	2-3/16														UC211-35		4.75
UCCFC212	60	195	160	113.1	17	19	12	15	36	135	74	65.1	25.4	M16	UC212	CFC212	5.77
UCCFC212-36	2-1/4	7-11/16	6-19/64	4-29/64	43/64	3/4	15/32	19/32	1-27/64	5.3150	2-27/64	2.5630	1.000	5/8	UC212-36		5.90
UCCFC212-37	2-5/16														UC212-37		5.82
UCCFC212-38	2-3/8														UC212-38		5.75
UCCFC212-39	2-7/16														UC212-39		5.68
UCCFC213	65	205	170	120.2	16	19	14	15	36	145	75	65.1	25.4	M16	UC213	CFC213	6.68
UCCFC213-40	2-1/2	8-5/64	6-11/16	4-47/64	5/8	3/4	35/64	19/32	1-27/64	5.5118	2-25/64	2.5630	1.000	5/8	UC213-40		6.77
UCCFC213-41	2-9/16														UC213-41		6.68
UCCFC214	70	215	177	125.1	17	19	14	18	40	150	84	74.6	30.2	M16	UC214	CFC214	8.10
UCCFC214-42	2-5/8	8-15/32	6-31/32	4-59/64	43/64	3/4	35/64	23/32	1-37/64	5.9055	2-25/64	2.9370	1.189	5/8	UC214-42		8.31
UCCFC214-43	2-11/16														UC214-43		8.21
UCCFC214-44	2-3/4														UC214-44		8.11
UCCFC215	75	220	184	130.1	18	19	16	18	40	160	86	77.8	33.3	M16	UCF215	CFC215	8.61
UCCFC215-45	2-13/16	8-21/32	7-1/4	5-1/8	23/32	3/4	5/8	23/32	1-37/64	6.2992	2-25/64	3.0630	1.311	5/8	UC215-45		8.86
UCCFC215-46	2-7/8														UC215-46		8.75
UCCFC215-47	2-15/16														UC215-47		8.64
UCCFC215-48	3														UC215-48		8.52
UCCFC216	80	240	200	141.4	18	23	16	18	42	170	91	82.6	33.3	M20	UC216	CFC216	10.80
UCCFC216-49	3-1/16	9-29/64	7-7/8	5-9/16	23/32	29/32	5/8	23/32	1-21/32	6.6929	2-25/64	3.2520	1.311	3/4	UC216-49		10.98
UCCFC216-50	3-1/8														UC216-50		10.85
UCCFC216-51	3-3/16														UC216-51		10.72
UCCFC217	85	250	208	147.1	18	23	18	20	45	180	93	85.7	34.1	M20	UC217	CFC217	13.46
UCCFC217-52	3-1/4	9-27/32	8-3/16	5-51/64	23/32	29/32	23/32	25/32	1-25/32	7.0866	2-25/64	3.3740	1.343	3/4	UC217-52		13.68
UCCFC217-53	3-5/16														UC217-53		13.54
UCCFC217-55	3-7/16														UC217-55		13.25
UCCFC218	90	265	220	155.5	22	23	18	20	50	190	104	95	39.7	M20	UC218	CFC218	15.66
UCCFC218-56	3-1/2	10-7/16	8-21/32	6-1/8	55/64	29/32	23/32	25/32	1-31/32	7.4803	2-25/64	3.7795	1.5630	3/4	UC218-56		15.77

Flange Cartridge Units

UCFCX (Medium-duty)

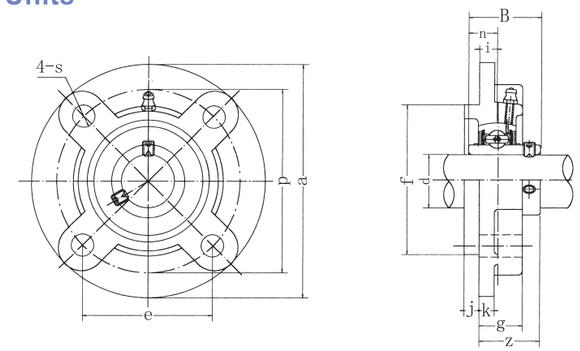

Unit No.	Dimensions mm in. d	a	P	e	i	s	j	k	g	f	z	B	n	Bolt Size mm inch	Bearing No.	Housing No.	Weight (kg)
UCFCX05	25	111	92	65	10	9.5	6	9.5	24	76	32.2	38.1	15.9	M8	UCX05	FCX05	1.2
UCFCX05-13	13/16	4-3/8	3-5/8	2-9/16	25/64	3/8	15/64	3/8	15/16	2.9921	1-9/32	1.5000	0.626	5/16	UCX05-13		
UCFCX05-14	7/8														UCX05-14		
UCFCX05-15	15/16														UCX05-15		
UCFCX05-16	1														UCX05-16		
UCFCX06	30	127	105	74.2	8	12	9.5	9.5	22.5	85	33.4	42.9	17.5	M10	UCX06	FCX06	1.5
UCFCX06-17	1-1/16	5	4-9/64	2-59/64	5/16	15/32	3/8	3/8	7/8	3.3465	1-5/16	1.6890	0.689	3/8	UCX06-17		
UCFCX06-18	1-1/8														UCX06-18		
UCFCX06-19	1-3/16														UCX06-19		
UCFCX06-20	1-1/4														UCX06-20		
UCFCX07	35	133	111	78.5	9	12	11	11	26	92	39.2	49.2	19	M10	UCX07	FCX07	1.9
UCFCX07-21	1-5/16	5-1/4	4-3/8	3-3/32	23/64	15/32	7/16	7/16	1-1/32	3.6220	1-17/32	1.9370	0.748	3/8	UCX07-21		
UCFCX07-22	1-3/8														UCX07-22		
UCFCX07-23	1-7/16														UCX07-23		
UCFCX08	40	133	111	78.5	9	12	11	11	26	92	39.2	49.2	19	M10	UCX08	FCX08	2.0
UCFCX08-24	1-1/2	5-1/4	4-3/8	3-3/32	23/64	15/32	7/16	7/16	1-1/32	3.6220	1-17/32	1.9370	0.748	3/8	UCX08-24		
UCFCX08-25	1-9/16														UCX08-25		
UCFCX09	45	155	130	91.9	8	14	12	11	25	108	40.6	51.6	19	M12	UCX09	FCX09	2.6
UCFCX09-26	1-5/8	6-3/32	5-1/8	3-5/8	5/16	35/64	15/32	7/16	63/64	4.2520	1-19/32	2.0315	0.748	7/16	UCX09-26		
UCFCX09-27	1-11/16														UCX09-27		
UCFCX09-28	1-3/4														UCX09-28		
UCFCX09-29	1-13/16														UCX09-29		
UCFCX10	50	162	136	96.2	7	14	16	11	25	118	40.4	55.6	22.2	M12	UCX10	FCX10	3.2
UCFCX10-30	1-7/8	6-3/8	5-23/64	3-25/32	9/32	35/64	5/8	7/16	63/64	4.6457	1-19/32	2.1890	0.874	7/16	UCX10-30		
UCFCX10-31	1-15/16														UCX10-31		
UCFCX10-32	2														UCX10-32		
UCFCX11	55	180	152	107.5	4	16	22	13	26	127	43.7	65.1	25.4	M14	UCX11	FCX11	4.3
UCFCX11-33	2-1/16	7-3/32	5-63/64	4-15/64	5/32	5/8	55/64	1/2	1-1/32	5.0000	1-23/32	2.5630	1.000	1/2	UCX11-33		
UCFCX11-34	2-1/8														UCX11-34		
UCFCX11-35	2-3/16														UCX11-35		
UCFCX11-36	2-1/4														UC211-36		
UCFCX11-37	2-5/16														UC211-37		
UCFCX12	60	194	165	116.7	11	16	20	14	33	140	50.7	65.1	25.4	M14	UCX12	FCX12	5.3
UCFCX12-38	2-3/8	7-5/8	6-1/2	4-19/32	7/16	5/8	25/32	9/16	1-5/16	5.5118	2	2.5630	1.000	1/2	UCX12-38		
UCFCX12-39	2-7/16														UCX12-39		
UCFCX13	65	194	165	116.7	11	16	20	14	33	140	55.4	74.6	30.2	M14	UCX13	FCX13	5.7
UCFCX13-40	2-1/2	7-5/8	6-1/2	4-19/32	7/16	5/8	25/32	9/16	1-5/16	5.5118	2-3/16	2.9370	1.189	1/2	UCX13-40		
UCFCX13-41	2-9/16														UCX13-41		
UCFCX14	70	222	190	134.3	14	19	20	14	36	164	58.5	77.8	33.3	M16	UCX14	FCX14	7.3
UCFCX14-42	2-5/8	8-3/4	7-31/64	5-9/32	35/64	3/4	25/32	9/16	1-13/32	6.4567	2-5/16	3.0630	1.311	5/8	UCX14-42		
UCFCX14-43	2-11/16														UCX14-43		
UCFCX14-44	2-3/4														UCX14-44		
UCFCX15	75	222	190	134.3	12	19	22	16	35	164	61.3	82.6	33.3	M16	UCX15	FCX15	8
UCFCX15-45	2-13/16	8-3/4	7-31/64	5-9/32	15/32	3/4	55/64	5/8	1-3/8	6.4567	2-13/32	3.2520	1.311	5/8	UCX15-45		
UCFCX15-46	2-7/8														UCX15-46		
UCFCX15-47	2-15/16														UCX15-47		
UCFCX15-48	3														UCX15-48		
UCFCX16	80	260	219	154.8	10	23	25	19	36	186	61.6	85.7	34.1	M20	UCX16	FCX16	11.3
UCFCX16-49	3-1/16	10-1/4	8-5/8	6-3/32	25/64	29/32	63/64	3/4	1-13/32	7.3228	2-7/16	3.3740	1.343	3/4	UCX16-49		
UCFCX16-50	3-1/8														UCX16-50		
UCFCX16-51	3-3/16														UCX16-51		
UCFCX16-52	3-1/4														UCX16-52		
UCFCX17	85	260	219	154.8	10	23	25	19	36	186	66.3	96	39.7	M20	UCX17	FCX17	12.9
UCFCX17-53	3-5/16	10-1/4	8-5/8	6-3/32	25/64	29/32	63/64	3/4	1-13/32	7.3228	2-5/8	3.7795	1.5630	3/4	UCX17-53		
UCFCX17-55	3-7/16														UCX17-55		

UCFS3 (Heavy-duty)

Flange Units

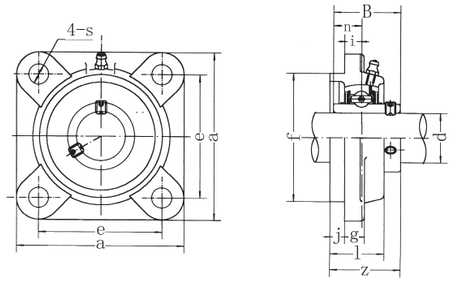

Unit No.	Dimensions mm / in d	a	e	i	s	j	g	l	f	z	b	n	Bolt size mm / inch	Bearing No.	Housing No.	Weight (kg)
UCFS305	25	110	80	9	16	7	13	29	80	39	38	15	M14	UC305	FS305	1.3
UCFS305-13	13/16													UC305-13		
UCFS305-14	7/8	4 11/32	3 5/32	23/64	5/8	9/32	1/2	1 9/64	3.1496	1 17/32	1.4961	0.591	1/2	UC305-14		
UCFS305-15	15/16													UC305-15		
UCFS305-16	1													UC305-16		
UCFS306	30	125	95	10	16	8	15	32	90	44	43	17	M14	UC306	FS306	1.9
UCFS306-17	1 1/16													UC306-17		
UCFS306-18	1 1/8	4 29/32	3 47/64	25/64	5/8	5/16	19/32	1 17/64	3.5433	4 47/64	1.6929	0.669	1/2	UC306-18		
UCFS306-19	1 3/16													UC306-19		
UCFS307	35	135	100	11	19	9	16	36	100	49	48	19	M16	UC307	FS307	2.4
UCFS307-20	1 1/4													UC307-20		
UCFS307-21	1 5/16	5 5/16	3 15/16	7/16	3/4	23/64	5/8	1 13/32	3.9730	1 59/64	1.8898	0.748	5/8	UC307-21		
UCFS307-22	1 3/8													UC307-22		
UCFS307-23	1 7/16													UC307-23		
UCFS308	40	150	112	13	19	10	17	40	115	56	52	19	M16	UC308	FS308	3.3
UCFS308-24	1 1/2	5 29/32	4 13/32	33/64	3/4	25/64	21/32	1 9/16	4.5276	2 13/64	2.0472	0.748	5/8	UC308-24		
UCFS308-25	1 9/16													UC308-25		
UCFS309	45	160	125	14	19	11	18	44	125	60	57	22	M16	UC309	FS309	4.0
UCFS309-26	1 5/8													UC309-26		
UCFS309-27	1 11/16	6 5/16	4 59/64	35/64	3/4	7/16	23/32	1 47/64	4.9213	2 23/64	2.2441	0.866	5/8	UC309-27		
UCFS309-28	1 3/4													UC309-28		
UCFS310	50	175	132	16	23	12	19	48	140	67	61	22	M20	UC310	FS310	5.3
UCFS310-29	1 13/16													UC310-29		
UCFS310-30	1 7/8	6 7/8	5 13/64	5/8	29/32	15/32	3/4	1 57/64	5.5118	2 41/64	2.4016	0.866	3/4	UC310-30		
UCFS310-31	1 15/16													UC310-31		
UCFS311	55	185	140	17	23	13	20	52	150	71	66	25	M20	UC311	FS311	6.2
UCFS311-32	2													UC311-32		
UCFS311-33	2 1/16	7 9/32	5 33/64	43/64	29/32	33/64	25/32	2 3/64	5.9055	2 51/64	2.5984	0.984	3/4	UC311-33		
UCFS311-34	2 1/8													UC311-34		
UCFS311-35	2 3/16													UC311-35		
UCFS312	60	195	150	19	23	14	22	56	160	78	71	26	M20	UC312	FS312	7.2
UCFS312-36	2 1/4													UC312-36		
UCFS312-37	2 5/16	7 11/16	5 29/32	3/4	29/32	35/64	7/8	2 7/32	6.2922	3 5/64	2.7953	0.984	3/4	UC312-37		
UCFS312-38	2 3/8													UC312-38		
UCFS312-39	2 7/16													UC312-39		
UCFS313	65	208	166	15	23	18	22	58	175	78	75	30	M20	UC313	FS313	8.9
UCFS313-40	2 1/2	8 3/16	6 17/32	19/32	29/32	45/64	55/64	2 9/32	6.8898	3 5/64	2.9528	1.181	3/4	UC313-40		
UCFS313-41	2 9/16													UC313-41		
UCFS314	70	226	178	18	25	18	25	61	185	81	78	33	M20	UC314	FS314	11
UCFS314-42	2 5/8													UC314-42		
UCFS314-43	2 11/16	8-25/32	6 1/64	45/64	63/64	45/64	31/32	2 13/32	7.2835	3 3/16	3.0708	1.299	7/8	UC314-43		
UCFS314-44	2 3/4													UC314-44		
UCFS315	75	236	184	21	25	18	25	66	200	89	82	32	M22	UC315	FS315	13
UCFS315-45	2 13/16													UC315-45		
UCFS315-46	2 7/8	9 9/32	7 1/4	53/64	63/64	45/64	31/32	2 19/32	7.8740	3 1/2	3.2283	1.260	7/8	UC315-46		
UCFS315-47	2 15/16													UC315-47		
UCFS315-48	3													UC315-48		
UCFS316	80	250	196	18	31	20	27	68	210	90	86	34	M27	UC316	FS316	15
UCFS316-49	3 1/16													UC316-49		
UCFS316-50	3 1/8	9 27/32	7 23/32	45/64	1 7/32	25/32	1 1/16	2 63/64	8.2677	3 35/64	3.3858	1.339	1	UC316-50		
UCFS316-51	3 3/16													UC316-51		
UCFS317	85	260	204	24	31	20	27	74	220	100	96	40	M27	UC317	FS317	17
UCFS317-52	3 1/4	10 1/4	8 1/32	15/16	1 7/32	25/32	1 1/16	2 29/32	8.6614	3 15/16	9.7795	1.575	1	UC317-52		
UCFS317-53	3 5/16													UC317-53		
UCFS317-55	3 7/16													UC317-55		
UCFS318	90	280	216	24	35	20	30	76	240	100	96	40	M30	UC318	FS318	21
UCFS318-55	3 7/16	11 1/32	8 1/2	15/16	1 3/8	25/32	1 3/16	3	9.4488	3 15/64	3.7795	1.575	1 1/8	UC318-55		
UCFS318-56	3 1/2													UC318-56		
UCFS319	95	290	228	39	35	20	30	94	250	121	103	41	M30	UC319	FS319	25
UCFS319-58	3 5/8	11 13/32	8 31/32	1 17/32	1 3/8	25/32	1 3/16	3 45/64	9.8425	4 49/64	4.0551	1.614	1 1/8	UC319-58		
UCFS319-59	3 11/16													UC319-59		
UCFS319-60	3 3/4													UC319-60		
UCFS320	100	310	242	39	38	20	32	94	260	125	108	42	M33	UC320	FS320	30
UCFS320-61	3 13/16													UC320-61		
UCFS320-62	3 7/8	12 7/32	9 17/32	1 17/32	1 1/2	25/32	1 3/16	3 45/64	10.2362	4 59/64	4.2520	1.654	1 1/4	UC320-62		
UCFS320-63	3 15/16													UC320-63		
UCFS320-64	4													UC320-64		

Flange Units (Oval)

UCFL2 (Normal-duty)

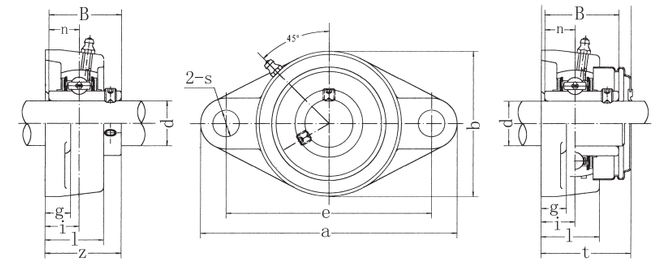

UCFL-C1(D1)

Unit No.	Dimensions mm / in. d	a	e	i	g	l	S	b	z	t	B	n	Bolt Size mm / inch	Bearing No.	Housing No.	Weight (kg)
UCFL201	12	113	90	15	11	25.5	12	60	33.3	37.5	31	12.7	M10	UC201	FL204	0.45
UCFL201-8	1/2	4-7/16	3-35/64	19/32	7/16	1	15/32	2-3/8	1-5/16	1-31/64	1.2205	0.500	3/8	UC201-8		0.44
UCFL202	15	113	90	15	11	25.5	12	60	33.3	37.5	31	12.7	M10	UC202	FL204	0.44
UCFL202-9	9/16	4-7/16	3-35/64	19/32	7/16	1	15/32	2-3/8	1-5/16	1-31/64	1.2205	0.500	3/8	UC202-9		0.44
UCFL202-10	5/8													UC202-10		0.44
UCFL203	17	113	90	15	11	25.5	12	60	33.3	37.5	31	12.7	M10	UC203	FL204	0.43
UCFL203-11	11/16	4-7/16	3-35/64	19/32	7/16	1	15/32	2-3/8	1-5/16	1-31/64	1.2205	0.500	3/8	UC203-11		0.42
UCFL204	20	113	90	15	11	25.5	12	60	33.3	37.5	31	12.7	M10	UC204	FL204	0.41
UCFL204-12	3/4	4-7/16	3-35/64	19/32	7/16	1	15/32	2-3/8	1-5/16	1-31/64	1.2205	0.500	3/8	UC204-12		0.41
UCFL205	25	130	99	16	13	27	16	68	35.8	40	34.1	14.3	M14	UC205	FL205	0.58
UCFL205-13	13/16													UC205-13		0.62
UCFL205-14	7/8	5-1/8	3-57/64	5/8	1/2	1-1/16	5/8	2-11/16	1-13/32	1-9/16	1.3425	0.563	1/2	UC205-14		0.61
UCFL205-15	15/16													UC205-15		0.59
UCFL205-16	1													UC205-16		0.58
UCFL206	30	148	117	18	13	31	16	80	40.2	44.5	38.1	15.9	M14	UC206	FL206	0.86
UCFL206-17	1-1/16													UC206-17		0.89
UCFL206-18	1-1/8	5-13/16	4-39/64	45/64	1/2	1-7/32	5/8	3-5/32	1-19/32	1-3/4	1.5000	0.626	1/2	UC206-18		0.88
UCFL206-19	1-3/16													UC206-19		0.86
UCFL206-20	1-1/4													UC206-20		0.85
UCFL207	35	161	130	19	14	34	16	90	44.4	48.5	42.9	17.5	M14	UC207	FL207	1.08
UCFL207-20	1-1/4													UC207-20		1.14
UCFL207-21	1-5/16	6-11/32	5-1/8	3/4	35/64	1-11/32	5/8	3-35/64	1-3/4	1-29/32	1.6890	0.689	1/2	UC207-21		1.11
UCFL207-22	1-3/8													UC207-22		1.08
UCFL207-23	1-7/16													UC207-23		1.05
UCFL208	40	175	144	21	14	36	16	100	51.2	55.5	49.2	19	M14	UC208	FL208	1.44
UCFL208-24	1-1/2	6-7/8	5-43/64	53/64	35/64	1-13/32	5/8	3-15/16	2-1/64	2-3/16	1.9370	0.748	1/2	UC208-24		1.48
UCFL208-25	1-9/16													UC208-25		1.45
UCFL209	45	188	148	22	15	38	19	108	52.2	56.5	49.2	19	M16	UC209	FL209	1.74
UCFL209-26	1-5/8													UC209-26		1.84
UCFL209-27	1-11/16	7-13/32	5-53/64	55/64	19/32	1-1/2	3/4	4-1/4	2-1/16	2-7/32	1.9370	0.748	5/8	UC209-27		1.80
UCFL209-28	1-3/4													UC209-28		1.76
UCFL210	50	197	157	22	15	40	19	115	54.6	59.5	51.6	19	M16	UC210	FL210	2.10
UCFL210-29	1-13/16													UC210-29		2.22
UCFL210-30	1-7/8	7-3/4	6-3/16	55/64	19/32	1-37/64	3/4	4-17/32	2-5/32	2-11/32	2.0315	0.748	5/8	UC210-30		2.17
UCFL210-31	1-15/16													UC210-31		2.12
UCFL210-32	2													UC210-32		2.08
UCFL211	55	224	184	25	18	43	19	130	58.4	63	55.6	22.2	M16	UC211	FL211	2.91
UCFL211-32	2													UC211-32		3.06
UCFL211-33	2-1/16	8-13/16	7-1/4	63/64	23/32	1-11/16	3/4	5-1/8	2-5/16	2-15/32	2.1890	0.874	5/8	UC211-33		3.00
UCFL211-34	2-1/8													UC211-34		2.95
UCFL211-35	2-3/16													UC211-35		2.89
UCFL212	60	250	202	29	18	48	23	140	68.7	73.5	65.1	25.4	M20	UC212	FL212	3.74
UCFL212-36	2-1/4													UC212-36		3.87
UCFL212-37	2-5/16	9-27/32	7-61/64	1-9/64	23/32	1-7/8	29/32	5-1/2	2-23/32	2-57/64	2.5630	1.000	3/4	UC212-37		3.79
UCFL212-38	2-3/8													UC212-38		3.72
UCFL212-39	2-7/16													UC212-39		3.65
UCFL213	65	258	210	30	22	50	23	155	69.7	74.5	65.1	25.4	M20	UC213	FL213	4.57
UCFL213-40	2-1/2	10-5/32	8-17/64	1-3/16	7/8	1-31/32	29/32	6-3/32	2-3/4	2-15/16	2.5630	1.000	3/4	UC213-40		4.66
UCFL213-41	2-9/16													UC213-41		4.57
UCFL214	70	265	216	31	22	54	23	160	75.4		74.6	30.2	M20	UC214	FL214	5.11
UCFL214-42	2-5/8													UC214-42		5.32
UCFL214-43	2-11/16	10-7/16	8-1/2	1-7/32	7/8	2-1/8	29/32	6-5/16	2-31/32		2.9370	1.189	3/4	UC214-43		5.22
UCFL214-44	2-3/4													UC214-44		5.12
UCFL215	75	275	225	34	22	56	23	165	78.5		77.8	33.3	M20	UC215	FL215	5.37
UCFL215-45	2-13/16													UC215-45		5.62
UCFL215-46	2-7/8	10-13/16	8-55/64	1-11/32	7/8	2-7/32	29/32	6-1/2	3-3/32		3.0630	1.311	3/4	UC215-46		5.51
UCFL215-47	2-15/16													UC215-47		5.40
UCFL215-48	3													UC215-48		5.28
UCFL216	80	290	233	34	22	58	25	180	83.3		82.6	33.3	M22	UC216	FL216	7.20
UCFL216-49	3-1/16													UC216-49		7.38
UCFL216-50	3-1/8	11-13/32	9-11/64	1-11/32	7/8	2-9/32	63/64	7-3/32	3-9/32		3.2520	1.311	7/8	UC216-50		7.25
UCFL216-51	3-1/16													UC216-51		7.12
UCFL217	85	305	248	36	24	63	25	190	87.6		85.7	34.1	M22	UC217	FL217	8.61
UCFL217-52	3-1/4													UC217-52		8.83
UCFL217-53	3-5/16	12	9-49/64	1-27/64	15/16	2-15/32	63/64	7-15/32	3-7/16		3.3740	1.343	7/8	UC217-53		8.69
UCFL217-55	3-7/16													UC217-55		8.40
UCFL218	90	320	265	40	24	68	25	205	96.3		96	39.7	M22	UC218	FL218	10.51
UCFL218-56	3-1/2	12-19/32	10-7/16	1-37/64	15/16	2-11/16	63/64	8-1/16	3-25/32		3.7795	1.5630	7/8	UC218-56		10.62

HCFL2 (Normal-duty)

Flange Units (Oval)

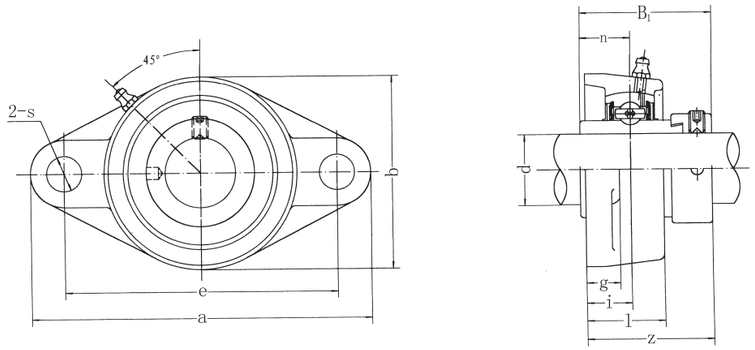

Unit No.	Dimensions mm / in. d	a	e	i	g	l	s	b	z	B1	n	Bolt Size mm / inch	Bearing No.	Housing No.	Weight (kg)
HCFL204	20	113	90	15	11	25.5	12	60	41.6	43.7	17.1	M10	HC204	FL204	0.48
HCFL204-12	3/4	4-7/16	3-35/64	19/32	7/16	1	15/32	2-3/8	1-41/64	1.720	0.673	3/8	HC204-12		0.48
HCFL205	25	130	99	16	13	27	16	68	42.9	44.4	17.5	M14	HC205	FL205	0.65
HCFL205-13	13/16												HC205-13		0.70
HCFL205-14	7/8	5-1/8	3-57/64	5/8	1/2	1-1/16	5/8	2-11/16	1-11/16	1.748	0.689	1/2	HC205-14		0.69
HCFL205-15	15/16												HC205-15		0.67
HCFL205-16	1												HC205-16		0.65
HCFL206	30	148	117	18	13	31	16	80	48.1	48.4	18.3	M14	HC206	FL206	0.99
HCFL206-17	1-1/16												HC206-17		1.04
HCFL206-18	1-3/8	5-13/16	4-39/64	45/64	1/2	1-7/32	5/8	3-5/32	1-57/64	1.906	0.720	1/2	HC206-18		1.01
HCFL206-19	1-3/16												HC206-19		0.99
HCFL206-20	1-1/4												HC206-20		0.96
HCFL207	35	161	130	19	14	34	16	90	51.3	51.1	18.8	M14	HC207	FL207	1.20
HCFL207-20	1-1/4												HC207-20		1.27
HCFL207-21	1-5/16	6-11/32	5-1/8	3/4	35/64	1-11/32	5/8	3-35/64	2-1/64	2.012	0.740	1/2	HC207-21		1.23
HCFL207-22	1-3/8												HC207-22		1.20
HCFL207-23	1-7/16												HC208-23		1.17
HCFL208	40	175	144	21	14	36	16	100	55.9	56.3	21.4	M14	HC208	FL208	1.59
HCFL208-24	1-1/2	6-7/8	5-43/64	53/64	35/64	1-13/32	5/8	3-15/16	2-13/64	2.217	0.843	1/2	HC208–24		1.64
HCFL208-25	1-9/16												HC208-25		1.60
HCFL209	45	188	148	22	15	38	19	108	56.9	56.3	21.4	M16	HC209	FL209	1.91
HCFL209-26	1-5/8												HC209-26		2.02
HCFL209-27	1-11/16	7-13/32	5-53/64	55/64	19/32	1-1/2	3/4	4-1/4	2-15/64	2.217	0.843	5/8	HC209-27		1.97
HCFL209-28	1-3/4												HC209-28		1.93
HCFL210	50	197	157	22	15	40	19	115	60.1	62.7	24.6	M16	HC210	FL210	2.29
HCFL210-29	1-13/16												HC210-29		2.44
HCFL210-30	1-7/8	7-3/4	6-3/16	55/64	19/32	1-37/64	3/4	4-17/32	2-23/64	2.469	0.969	5/8	HC210-30		2.38
HCFL210-31	1-15/16												HC210-31		2.32
HCFL210-32	2												HC210-32		2.26
HCFL211	55	224	184	25	18	43	19	130	68.6	71.4	27.8	M16	HC211	FL211	3.12
HCFL211-32	2												HC211-32		3.32
HCFL211-33	2-1/16	8-13/16	7-1/4	63/64	23/32	1-11/16	3/4	5-1/8	2-45/64	2.811	1.094	5/8	HC211-33		3.24
HCFL211-34	2-1/8												HC211-34		3.17
HCFL211-35	2-3/16												HC211-35		3.09
HCFL212	60	250	202	29	18	48	23	140	75.8	77.8	31	M20	HC212	FL212	4.08
HCFL212-36	2-1/4												HC212-36		4.24
HCFL212-37	2-5/16	9-27/32	7-61/64	1-9/64	23/32	1-7/8	29/32	5-1/2	2-63/64	3.063	1.220	3/4	HC212-37		4.15
HCFL212-38	2-3/8												HC212-38		4.10
HCFL212-39	2-7/16												HC212-39		3.97
HCFL213	65	258	210	30	22	50	23	155	81.6	85.7	34.1	M20	HC213	FL213	5.13
HCFL213–40	2-1/2	10-5/32	8-17/64	1-3/16	7/8	1-31/32	29/32	6-3/32	3-7/32	3.374	1.343	3/4	HC213-40		5.23
HCFL213-41	2-9/16												HC213-41		5.12
HCFL214	70	265	216	31	22	54	23	160	82.6	85.7	34.1	M20	HC214	FL214	5.61
HCFL214-42	2-3/8												HC214-42		5.85
HCFL214-43	2-11/16	10-7/16	8-1/2	1-7/32	7/8	2-1/8	29/32	6-5/16	3-1/4	3.374	1.343	3/4	HC214-43		5.74
HCFL214-44	2-3/4												HC214-44		5.62
HCFL215	75	275	225	34	22	56	23	165	88.8	92.1	37.3	M20	HC215	FL215	6.00
HCFL215-45	2-13/16												HC215-45		6.30
HCFL215-46	2-7/8	10-13/16	8-55/64	1-11/32	7/8	2-7/32	29/32	6-1/2	3-1/2	3.626	1.426	3/4	HC215-46		6.17
HCFL215-47	2-15/16												HC215-47		6.04
HCFL215-48	3												HC215-48		5.90

Flange Units (Oval)
(with adapter mounted)

UKFL2 (Normal-duty)

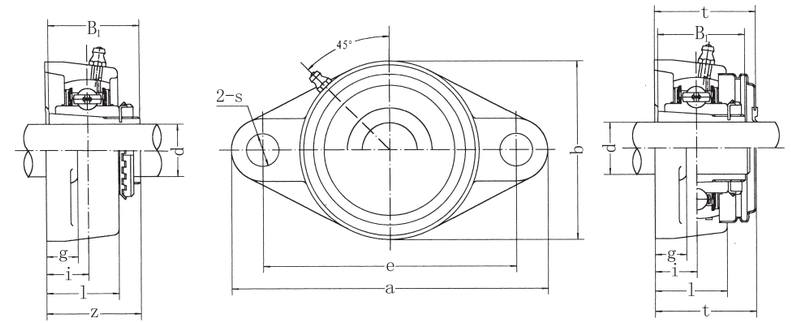

UKFL-C1(D1)

Unit No.	Dimensions mm / In. d	a	e	i	g	l	s	b	z	t	B1	Bolt Size mm / inch	Bearing No.	Housing No.	Weight (kg)
UKFL205;H2305	20	130	99	16	13	27	16	68	35.5	40	35	M14	UK205;H2305	FL205	0.63
UKFL205;HE2305	3/4	5-1/8	3-57/64	5/8	1/2	1-1/16	5/8	2-11/16	1-25/64	1-9/16	1.378	1/2	UK205;HE2305		
UKFL206;H2306	25	148	117	18	13	31	16	80	39	44.5	38	M14	UK206;H2306	FL206	0.90
UKFL206;HS2306	7/8	5-13/16	4-39/64	45/64	1/2	1-7/32	5/8	3-5/32	1-17/32	1-3/4	1.496	1/2	UK206;HS2306		
UKFL206;HE2306	1												UK206;HE2306		
UKFL207;H2307	30	161	130	19	14	34	16	90	42.5	48.5	43	M14	UK207;H2307	FL207	1.17
UKFL207;HS2307	1-1/8	6-11/32	5-1/8	3/4	35/64	1-11/32	5/8	3-35/64	1-43/64	1-29/32	1.693	1/2	UK207;HS2307		
UKFL208;H2308	35	175	144	21	14	36	16	100	46.5	55.5	46	M14	UK208;H2308	FL208	1.54
UKFL208;HE2308	1-1/4	6-7/8	5-43/64	53/64	35/64	1-13/32	5/8	3-15/16	1-53/64	2-3/16	1.811	1/2	UK208;HE2308		
UKFL208;HS2308	1-3/8												UK208;HS2308		
UKFL209;H2309	40	188	148	22	15	38	19	108	48.5	56.5	50	M16	UK209;H2309	FL209	1.89
UKFL209;HA2309	1-7/16												UK209;HA2309		
UKFL209;HE2309	1-1/2	7-13/32	5-53/64	55/64	19/32	1-1/2	3/4	4-1/4	1-29/32	2-7/32	1.969	5/8	UK209;HE2309		
UKFL209;HS2309	1-5/8												UK209;HS2309		
UKFL210;H2310	45	197	157	22	15	40	19	115	50	59.5	55	M16	UK210;H2310	FL210	2.27
UKFL210;HS2310	1-5/8												UK210;HS2310		
UKFL210;HA2310	1-11/16	7-3/4	6-3/16	55/64	19/32	1-37/64	3/4	4-17/32	1-31/32	2-11/32	2.165	5/8	UK210;HA2310		
UKFL210;HE2310	1-3/4												UK210;HE2310		
UKFL211;H2311	50	224	184	25	18	43	19	130	54.5	63	59	M16	UK211;H2311	FL211	3.06
UKFL211;HS2311	1-7/8												UK211;HS2311		
UKFL211;HA2311	1-15/16	8-13/16	7-1/4	63/64	23/32	1-11/16	3/4	5-1/8	2-9/64	2-15/32	2.323	5/8	UK211;HA2311		
UKFL211;HE2311	2												UK211;HE2311		
UKFL212;H2312	55	250	202	29	18	48	23	140	61	73.5	62	M20	UK212;H2312	FL212	3.79
UKFL212;HS2312	2-1/8	9-27/32	7-61/64	1-9/64	23/32	1-7/8	29/32	5-1/2	2-13/32	2-57/64	2.441	3/4	UK212;HS2312		
UKFL213;H2313	60	258	210	30	22	50	23	155	64	74.5	65	M20	UK213;H2313	FL213	4.48
UKFL213;HA2313	2-3/16												UK213;HA2313		
UKFL213;HE2313	2-1/4	10-5/32	8-17/64	1-3/16	7/8	1-31/32	29/32	6-3/32	2-33/64	2-15/16	2.559	3/4	UK213;HE2313		
UKFL213;HS2313	2-3/8												UK213;HS2313		
UKFL215;H2315	65	275	225	34	22	56	23	165	71		73	M20	UK215;H2315	FL215	5.48
UKFL215;HA2315	2-7/16	10-13/16	8-55/64	1-11/32	7/8	2-7/32	29/32	6-1/2	2-51/64		2.874	3/4	UK215;HA2315		
UKFL215;HE2315	2-1/2												UK215;HE2315		
UKFL216;H2316	70	290	233	34	22	58	25	180	73.5		78	M22	UK216;H2316	FL216	7.46
UKFL216;HA2316	2-11/16	11-13/32	9-11/64	1-11/32	7/8	2-9/32	63/64	7-3/32	2-57/64		3.071	7/8	UK216;HA2316		
UKFL216;HE2316	2-3/4												UK216;HE2316		
UKFL217;H2317	75	305	248	36	24	63	25	190	77		82	M22	UK217;H2317	FL217	9.03
UKFL217;HA2317	2-15/16	12	9-49/64	1-27/64	15/16	2-15/32	63/64	7-15/32	3-1/32		3.228	7/8	UK217;HA2317		
UKFL217;HE2317	3												UK217;HE2317		
UKFL218;H2318	80	320	265	40	24	68	25	205	81.5		86	M22	UK218;H2318	FL218	10.89
UKFL218;HA2318	3-3/16	12-19/32	10-7/16	1-37/64	15/16	2-11/16	63/64	8-1/16	3-13/64		3.386	7/8	UK218;HA2318		

UCFT2 (Normal-duty)

Flange Units (Oval)

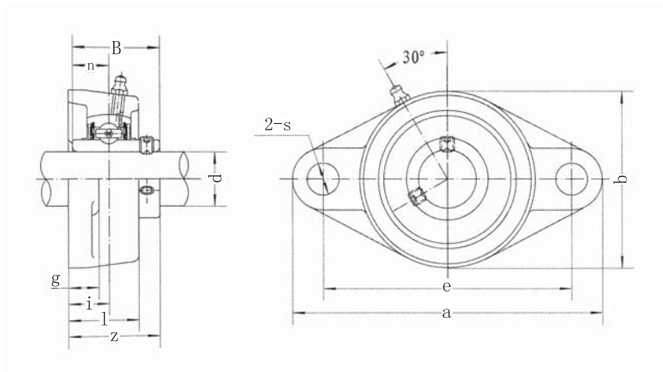

Unit No.	Dimensions mm / in.											Bolt Size mm / inch	Bearing No.	Housing No.	Weight (kg)
	d	a	e	i	g	l	s	b	z	B	n				
UCFT204	20	112	89.5	19	11	29	10.5	60	33.3	31	12.7	M8	UC204	FT204	0.45
UCFT204-12	3/4	4-13/32	3-33/64	3/4	7/16	1-9/64	27/64	2-3/8	1-5/16	1.2205	0.500	5/16	UC204-12		
UCFT205	25	124	99	20	13	31	13	70	35.8	34.1	14.6	M10	UC205	FT205	0.64
UCFT205-13	13/16	4-7/8	3-57/64	25/32	1/2	1-7/32	33/64	2-3/4	1-13/32	1.3425	0.563	3/8	UC205-13		
UCFT205-14	7/8												UC205-14		
UCFT205-15	15/16												UC205-15		
UCFT205-16	1												UC205-16		
UCFT206	30	141	116.5	21	13	34	13	82	40.2	38.1	15.9	M10	UC206	FT206	0.91
UCFT206-17	1-1/16	5-35/64	4-37/64	53/64	1/2	1-11/32	33/64	3-15/64	1-19/32	1.5000	0.626	3/8	UC206-17		
UCFT206-18	1-1/8												UC206-18		
UCFT206-19	1-3/16												UC206-19		
UCFT206-20	1-1/4												UC206-20		
UCFT207	35	156	130	21.5	14	36.5	14	95	44.4	42.9	17.5	M12	UC207	FT207	1.28
UCFT207-20	1-1/4	6-9/64	5-1/8	27/32	35/64	1-7/16	35/64	3-47/64	1-3/4	1.6890	0.689	7/16	UC207-20		
UCFT207-21	1-5/16												UC207-21		
UCFT207-22	1-3/8												UC207-22		
UCFT207-23	1-7/16												UC207-23		
UCFT208	40	171	143.5	24	14	39	14	105	51.2	49.2	19	M12	UC208	FT208	1.64
UCFT208-24	1-1/2	6-47/64	5-21/32	61/64	35/64	1-17/32	35/64	4-9/64	2-1/64	1.9370	0.748	7/16	UC208-24		
UCFT208-25	1-9/16												UC208-25		
UCFT209	45	179	148.5	24	14	40	16	111	52.2	49.2	19	M14	UC209	FT209	1.88
UCFT209-26	1-5/8	7-3/64	5-55/64	61/64	35/64	1-37/64	5/8	4-3/8	2-1/16	1.9370	0.748	1/2	UC209-26		
UCFT209-27	1-11/16												UC209-27		
UCFT209-28	1-3/4												UC209-28		
UCFT210	50	189	157	28.5	14	47	16	116	54.6	51.6	19	M14	UC210	FT210	2.18
UCFT210-29	1-13/16	7-7/16	6-3/16	1-1/8	35/64	1-27/32	5/8	4-9/16	2-5/32	2.0315	0.748	1/2	UC210-29		
UCFT210-30	1-7/8												UC210-30		
UCFT210-31	1-15/16												UC210-31		
UCFT210-32	2												UC210-32		
UCFT211	55	216	184	32	20	50	18	133	58.4	55.6	22.2	M16	UC211	FT211	3.25
UCFT211-32	2	8-1/2	7-1/4	1-17/64	25/32	1-31/32	45/64	5-15/64	2-5/16	2.1890	0.874	5/8	UC211-32		
UCFT211-33	2-1/16												UC211-33		
UCFT211-34	2-1/8												UC211-34		
UCFT211-35	2-3/16												UC211-35		

Flange Units (Oval)

HCFT2 (Normal-duty)

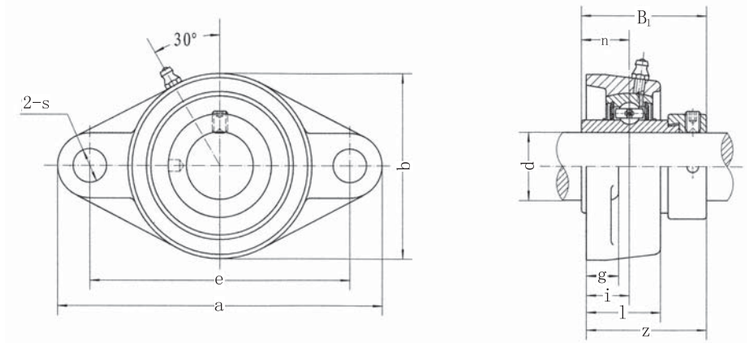

Unit No.	Dimensions mm / in.											Bolt Size mm / inch	Bearing No.	Housing No.	Weight (kg)
	d	a	e	i	g	l	s	b	z	B_1	n				
HCFT204	20	112	89.5	19	11	29	10.5	60	41.6	43.7	17.1	M8	HC204	FT204	0.50
HCFT204-12	3/4	4-13/32	3-33/64	3/4	7/16	1-9/64	27/64	2-3/8	1-41/64	1.720	0.673	5/16	HC204-12		
HCFT205	25	124	99	20	13	31	13	70	42.9	44.4	17.5	M10	HC205	FT205	0.69
HCFT205-13	13/16	4-7/8	3-57/64	25/32	1/2	1-7/32	33/64	2-3/4	1-11/16	1.748	0.689	3/8	HC205-13		
HCFT205-14	7/8												HC205-14		
HCFT205-15	15/16												HC205-15		
HCFT205-16	1												HC205-16		
HCFT206	30	141	116.5	21	13	34	13	82	48.1	48.4	18.3	M10	HC206	FT206	0.98
HCFT206-17	1-1/16	5-35/64	4-37/64	53/64	1/2	1-11/32	33/64	3-15/64	1-57/64	1.906	0.720	3/8	HC206-17		
HCFT206-18	1-1/8												HC206-18		
HCFT206-19	1-3/16												HC206-19		
HCFT206-20	1-1/4												HC206-20		
HCFT207	35	156	130	21.5	14	36.5	14	95	51.3	51.1	18.8	M12	HC207	FT207	1.41
HCFT207-20	1-1/4	6-9/64	5-1/8	27/32	35/64	1-7/16	35/64	3-47/64	2-1/64	2.012	0.740	7/16	HC207-20		
HCFT207-21	1-5/16												HC207-21		
HCFT207-22	1-3/8												HC207-22		
HCFT207-23	1-7/16												HC207-23		
HCFT208	40	171	143.5	24	14	39	14	105	55.9	56.3	21.4	M12	HC208	FT208	1.77
HCFT208-24	1-1/2	6-47/64	5-21/32	61/64	35/64	1-17/32	35/64	4-9/64	2-13/64	2.217	0.843	7/16	HC208-24		
HCFT208-25	1-9/16												HC208-25		
HCFT209	45	179	148.5	24	14	40	16	111	56.9	56.3	21.4	M14	HC209	FT209	2.00
HCFT209-26	1-5/8	7-3/64	5-55/64	61/64	35/64	1-37/64	5/8	4-3/8	2-15/64	2.217	0.843	1/2	HC209-26		
HCFT209-27	1-11/16												HC209-27		
HCFT209-28	1-3/4												HC209-28		
HCFT210	50	189	157	28.5	14	47	16	116	60.1	62.7	24.6	M14	HC210	FT210	2.38
HCFT210-29	1-13/16	7-7/16	6-3/16	1-1/8	35/64	1-27/32	5/8	4-9/16	2-23/64	2.469	0.969	1/2	HC210-29		
HCFT210-30	1-7/8												HC210-30		
HCFT210-31	1-15/16												HC210-31		
HCFT210-32	2												HC210-32		
HCFT211	55	216	184	32	20	50	18	133	68.6	71.4	27.8	M16	HC211	FT211	3.52
HCFT211-32	2	8-1/2	7-1/4	1-17/64	25/32	1-31/32	45/64	5-15/64	2-45/64	2.811	1.094	5/8	UC211-32		
HCFT211-33	2-1/16												HC211-33		
HCFT211-34	2-1/8												HC211-34		
HCFT211-35	2-3/16												HC211-35		

UCCJT2(Normal-duty)

Flange Units (Oval)

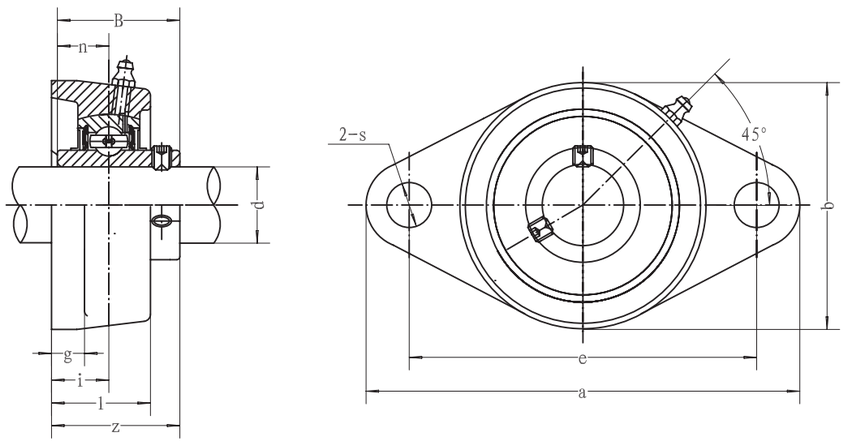

Unit No.	Dimensions mm / in.											Bolt Size mm / inch	Bearing No.	Housing No.	Weight (kg)
	d	a	e	i	g	l	s	b	z	B	n				
UCCJT201	12	99	76.5	17	9.5	25	11.5	57	32.9	27.4	11.5	M10	UCS201	CJT03	0.370
UCCJT202	15	3-57/64	3-1/64	43/64	3/8	63/64	29/64	2-1/4	1-19/64	1.0787	0.4527	3/8	UCS202		0.360
UCCJT203	17												UCS203		0.350
UCCJT204	20	112	90	19	10	28	11.5	61	37.3	31	12.7	M10	UC204	CJT04	0.478
		4-13/32	3-35/64	3/4	25/64	1-7/64	29/64	2-13/32	1-15/32	1.2205	0.500	3/8			
UCCJT205	25	124	99	19	11	29	11.5	70	38.8	34.1	14.3	M10	UC205	CJT05	0.564
		4-7/8	3-57/64	3/4	7/16	1-9/64	29/64	2-3/4	1-17/32	1.3425	0.563	3/8			
UCCJT206	30	142	116.5	20	12	29	11.5	80	42.2	38.1	15.9	M10	UC206	CJT06	0.738
		5-19/32	4-19/32	25/32	15/32	1-9/64	29/64	3-5/32	1-21/32	1.5000	0.626	3/8			
UCCJT207	35	155	130	21	12.5	30.5	14	92	46.4	42.9	17.5	M12	UC207	CJT07	1.101
		6-7/64	5-1/8	53/64	31/64	1-13/64	35/64	3-5/8	1-53/64	1.6890	0.689	1/2			
UCCJT208	40	172	143.5	24	13	34.5	14	105	54.2	49.2	19	M12	UC208	CJT08	1.541
		6-49/64	5-43/64	61/64	33/64	1-23/64	35/64	4-9/64	2-9/64	1.9370	0.748	1/2			
UCCJT209	45	180	148.5	24	13	35	14	111	54.2	49.2	19	M12	UC209	CJT09	1.709
		7-5/32	5-53/64	61/64	33/64	1-3/8	35/64	4-3/8	2-9/64	1.9370	0.748	1/2			
UCCJT210	50	190	157	28	13	39	18	116	60.6	51.6	19	M16	UC210	CJT10	1.971
		7-31/64	6-3/16	1-7/64	33/64	1-17/32	45/64	4-9/16	2-25/64	2.0315	0.748	5/8			
UCCJT211	55	222	184	31	15	43.5	18	134	64.4	55.6	22.2	M16	UC211	CJT11	2.523
		8-47/64	4-39/64	1-7/32	19/32	1-23/32	45/64	5-9/32	2-17/32	2.1890	0.874	5/8			
UCCJT212	60	238	202	34	16	46	18	138	73.7	65.1	25.4	M16	UC212	CJT12	3.292
		9-3/8	5-1/8	1-11/32	5/8	1-13/16	45/64	5-7/16	2-29/32	2.5630	1.000	5/8			
UCCJT213	65	258	216	38	18	57	21	160	82.4	65.1	25.4	M18	UC213	CJT13	5.467
		10-5/32	8-1/2	1-1/2	45/64	2-1/4	53/64	6-19/64	3-1/4	2.5630	1.000	23/32			
UCCJT214	70	258	216	38	18	57	21	160	82.4	74.6	30.2	M18	UC214	CJT14	5.862
		10-5/32	8-1/2	1-1/2	45/64	2-1/4	53/64	6-19/64	3-1/4	2.9370	1.189	23/32			
UCCJT215	75	258	216	38	18	57	21	160	82.4	77.8	33.3	M18	UC215	CJT15	5.675
		10-5/32	8-1/2	1-1/2	45/64	2-1/4	53/64	6-19/64	3-1/4	3.0630	1.311	23/32			

Flange Units (Oval)

HCCJT2(Normal-duty)

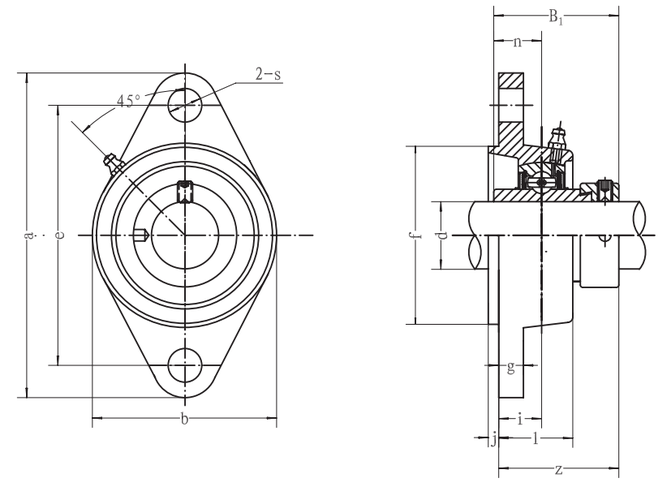

Unit No.	Dimensions mm / in.													Bolt Size mm / inch	Bearing No.	Housing No.	Weight (kg)
	d	a	e	i	g	l	s	j	b	f	z	B_1	n				
HCCJTZ204	20	112.5	90	19	10	31.7	11.5	3.5	60.5	55	45.6	43.7	17.1	M10	HC204	CJTZ04	0.543
		4-7/16	3-35/64	3/4	25/34	1-1/4	29/64	9/64	2-13/32	2-11/64	1-51/64	1.720	0.673	3/8			
HCCJTZ205	25	124	99	19	12	26.5	11.5	3.5	70	60	45.9	44.4	17.5	M10	HC205	CJTZ05	0.641
		4-7/8	3-57/64	3/4	15/32	1-3/64	29/64	9/64	2-3/4	2-23/64	1-13/16	1.748	0.689	3/8			
HCCJTZ206	30	142	116.5	20	12	26	11.5	3	83	80	47.1	48.4	18.3	M10	HC206	CJTZ06	0.912
		5-19/32	4-19/32	25/32	15/32	1-1/32	29/64	1/8	3-17/64	3-5/32	1-55/64	1.906	0.720	3/8			
HCCJTZ207	35	155	130	20	12.5	26.5	14	4	94	90	49.3	51.1	18.8	M12	HC207	CJTZ07	1.269
		6-7/64	5-1/8	25/32	31/64	1-3/64	35/64	5/32	3-45/64	3-35/64	1-15/16	2.012	0.740	1/2			
HCCJTZ208	40	172	143.5	20	13	30.5	14	4	105	100	54.9	56.3	21.4	M12	HC208	CJTZ08	1.706
		6-49/64	5-43/64	25/32	33/64	1-13/64	35/64	5/32	4-9/64	3-5/16	2-5/32	2.217	0.843	1/2			
HCCJTZ209	45	180	148.5	20	13	31	14	4	111	105	54.9	56.3	21.4	M12	HC209	CJTZ09	1.878
		7-5/32	5-53/64	25/32	33/64	1-7/32	35/64	5/32	4-3/8	4-9/64	2-5/32	2.217	0.843	1/2			
HCCJTZ210	50	190	157	24	13	35	14	4	116	105	62.1	62.7	24.6	M12	HC210	CJTZ10	2.183
		7-31/64	6-3/16	15/16	33/64	1-3/8	35/64	5/32	4-9/16	4-9/64	2-7/16	2.469	0.969	1/2			
HCCJTZ212	60	238	202	30	16	42	18	4	138	130	76.8	77.8	31	M16	HC212	CJTZ12	3.677
		9-3/8	5-1/8	1-3/16	5/8	1-21/32	45/64	5/32	5-7/16	5-1/8	3-1/32	3.063	1.220	5/8			

UCCFL2 (Normal-duty)

Flange Units (Oval)

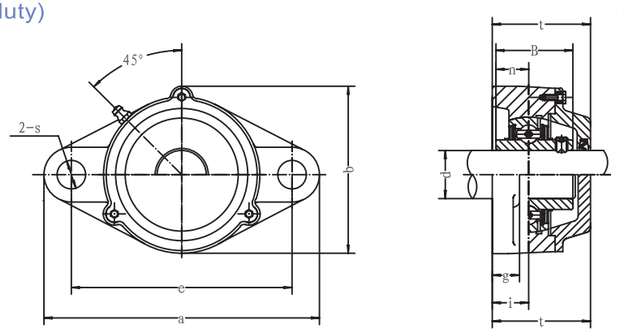

Unit No.	Dimensions mm in. d	a	e	i	g	s	b	t	B	n	Bolt Size mm inch	Bearing No.	Housing No.	Weight (kg)
UCCFL204	20	113	90	15	11	12	66	46	31	12.7	M10	UC204	CFL204	0.60
UCCFL204-12	3/4	4-7/16	3-35/64	19/32	7/16	15/32	2-19/32	1-13/16	1.2205	0.500	3/8	UC204-12		0.60
UCCFL205	25	130	99	16	13	16	73	51	34.1	14.3	M14	UC205	CFL205	0.92
UCCFL205-13	13/16											UC205-13		0.96
UCCFL205-14	7/8	5-1/8	3-57/64	5/8	1/2	5/8	2-7/8	2-1/64	1.3425	0.563	1/2	UC205-14		0.95
UCCFL205-15	15/16											UC205-15		0.93
UCCFL205-16	1											UC205-16		0.92
UCCFL206	30	148	117	18	13	16	84	55	38.1	15.9	M14	UC206	CFL206	1.23
UCCFL206-17	1-1/16											UC206-17		1.24
UCCFL206-18	1-1/8	5-13/16	4-39/64	45/64	1/2	5/8	3-5/16	1-11/64	1.5000	0.626	1/2	UC206-18		1.25
UCCFL206-19	1-3/16											UC206-19		1.23
UCCFL206-20	1-1/4											UC206-20		1.22
UCCFL207	35	161	130	19	14	16	94	59	42.9	17.5	M14	UC207	CFL207	1.67
UCCFL207-20	1-1/4											UC207-20		1.73
UCCFL207-21	1-5/16	6-11/32	5-1/8	3/4	35/64	5/8	3-45/64	1-21/64	1.6890	0.689	1/2	UC207-21		1.70
UCCFL207-22	1-3/8											UC207-22		1.67
UCCFL207-23	1-7/16											UC207-23		1.64
UCCFL208	40	175	144	21	14	16	104	66	49.2	19	M14	UC208	CFL208	2.20
UCCFL208-24	1-1/2	6-7/8	5-43/64	53/64	35/64	5/8	3-3/32	2-19/32	1.9370	0.748	1/2	UC208-24		2.24
UCCFL208-25	1-9/16											UC208-25		2.21
UCCFL209	45	188	148	22	15	19	113	67	49.2	19	M16	UC209	CFL209	2.60
UCCFL209-26	1-5/8											UC209-26		2.70
UCCFL209-27	1-11/16	7-13/32	5-53/64	55/64	19/32	3/4	4-29/64	2-41/64	1.9370	0.748	5/8	UC209-27		2.66
UCCFL209-28	1-3/4											UC209-28		2.62
UCCFL210	50	197	157	22	15	19	120	71	51.6	19	M16	UC210	CFL210	2.96
UCCFL210-29	1-13/16											UC210-29		3.08
UCCFL210-30	1-7/8	7-3/4	6-3/16	55/64	19/32	3/4	4-23/32	2-51/64	2.0315	0.748	5/8	UC210-30		3.03
UCCFL210-31	1-15/16											UC210-31		2.98
UCCFL210-32	2											UC210-32		2.84
UCCFL211	55	224	184	25	18	19	134	75	55.6	22.2	M16	UC211	CFL211	4.27
UCCFL211-32	2											UC211-32		4.42
UCCFL211-33	2-1/16	8-13/16	7-1/4	63/64	23/32	3/4	5-9/32	2-61/64	2.1890	0.874	5/8	UC211-33		4.36
UCCFL211-34	2-1/8											UC211-34		4.31
UCCFL211-35	2-3/16											UC211-35		4.25
UCCFL212	60	250	202	29	18	23	144	86	65.1	25.4	M20	UC212	CFL212	5.27
UCCFL212-36	2-1/4											UC212-36		5.40
UCCFL212-37	2-5/16	9-27/32	7-61/64	1-9/64	23/32	29/32	5-43/64	3-25/64	2.5630	1.000	3/4	UC212-37		5.32
UCCFL212-38	2-3/8											UC212-38		5.25
UCCFL212-39	2-7/16											UC212-39		5.18
UCCFL213	65	258	210	30	22	23	157	89	65.1	25.4	M20	UC213	CFL213	6.68
UCCFL213-40	2-1/2	10-5/32	8-17/64	1-3/16	7/8	29/32	6-3/16	3-35/64	2.5630	1.000	3/4	UC213-40		6.77
UCCFL213-41	2-9/16											UC213-41		6.68
UCCFL214	70	265	216	31	22	23	163	98	74.6	30.2	M20	UC214	CFL214	7.50
UCCFL214-42	2-5/8											UC214-42		7.71
UCCFL214-43	2-11/16	10-7/16	8-1/2	1-7/32	7/8	29/32	6-27/64	3-55/64	2.9370	1.189	3/4	UC214-43		7.61
UCCFL214-44	2-3/4											UC214-44		7.51
UCCFL215	75	275	225	34	22	23	168	102	77.8	33.3	M20	UCF215	CFL215	8.01
UCCFL215-45	2-13/16											UC215-45		8.26
UCCFL215-46	2-7/8	10-13/16	8-55/64	1-11/32	7/8	29/32	6-39/64	4-1/64	3.0630	1.311	3/4	UC215-46		8.15
UCCFL215-47	2-15/16											UC215-47		8.04
UCCFL215-48	3											UC215-48		7.92
UCCFL216	80	290	233	34	22	25	188	107	82.6	33.3	M22	UC216	CFL216	10.40
UCCFL216-49	3-1/16											UC216-49		10.58
UCCFL216-50	3-1/8	11-13/32	9-11/64	1-11/32	7/8	63/64	7-13/32	4-7/32	3.2520	1.311	7/8	UC216-50		10.45
UCCFL216-51	3-3/16											UC216-51		10.32
UCCFL217	85	305	248	36	24	25	198	111	85.7	34.1	M22	UC217	CFL217	12.76
UCCFL217-52	3-1/4											UC217-52		12.98
UCCFL217-53	3-5/16	12	9-49/64	1-27/64	15/16	63/64	7-51/64	4-3/8	3.3740	1.343	7/8	UC217-53		12.84
UCCFL217-55	3-7/16											UC217-55		12.55
UCCFL218	90	320	265	40	24	25	211	122	96	39.7	M22	UC218	CFL218	15.16
UCCFL218-56	3-1/2	12-19/32	10-7/16	1-37/64	15/16	63/64	8-5/16	4-51/64	3.7795	1.5630	7/8	UC218-56		15.27

Flange Units (Oval)

UCFLX (Medium-duty)

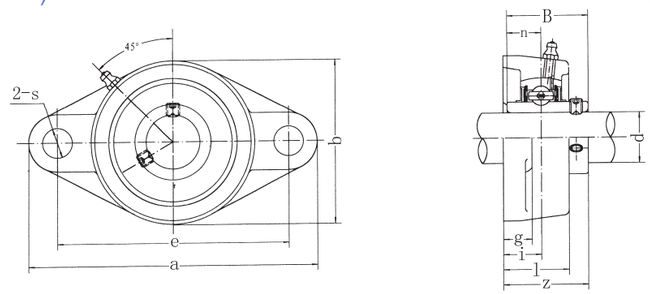

Unit No.	Dimensions mm in. d	a	e	i	g	l	s	b	z	B	n	Bolt Size mm inch	Bearing No.	Housing No.	Weight (kg)
UCFLX05	25	141	117	18	13	30	12	83	40.2	38.1	15.9	M10	UCX05	FLX05	1.0
UCFLX05-13	13/16												UCX05-13		
UCFLX05-14	7/8	5-9/16	4-39/64	45/64	1/2	1-3/16	15/32	3-9/32	1-37/64	1.5000	0.626	3/8	UCX05-14		
UCFLX05-15	15/16												UCX05-15		
UCFLX05-16	1												UCX05-16		
UCFLX06	30	156	130	19	15	34	16	95	44.4	42.9	17.5	M14	UCX06	FLX06	1.5
UCFLX06-17	1-1/16												UCX06-17		
UCFLX06-18	1-1/8	6-5/32	5-1/8	3/4	19/32	1-11/32	5/8	3-3/4	1-3/4	1.6890	0.689	1/2	UCX06-18		
UCFLX06-19	1-3/16												UCX06-19		
UCFLX06-20	1-1/4												UCX06-20		
UCFLX07	35	171	144	21	16	38	16	105	51.2	49.2	19	M14	UCX07	FLX07	2.0
UCFLX07-21	1-5/16												UCX07-21		
UCFLX07-22	1-3/8	6-23/32	5-43/64	53/64	5/8	1-1/2	5/8	4-1/8	2-1/64	1.9370	0.748	1/2	UCX07-22		
UCFLX07-23	1-7/16												UCX07-23		
UCFLX08	40	179	148	22	16	40	16	111	52.2	49.2	19	M14	UCX08	FLX08	2.2
UCFLX08-24	1-1/2	7-1/16	5-53/64	55/64	5/8	1-9/16	5/8	4-3/8	2-1/16	1.9370	0.748	1/2	UCX08-24		
UCFLX08-25	1-9/16												UCX08-25		
UCFLX09	45	189	157	23	16	40	16	116	55.6	51.6	19	M14	UCX09	FLX09	2.4
UCFLX09-26	1-5/8												UCX09-26		
UCFLX09-27	1-11/16	7-7/16	6-3/16	29/32	5/8	1-37/64	5/8	4-9/16	2-3/16	2.0315	0.748	1/2	UCX09-27		
UCFLX09-28	1-3/4												UCX09-28		
UCFLX09-29	1-13/16												UCX09-29		
UCFLX10	50	216	184	26	18	44	19	133	59.4	55.6	22.2	M16	UCX10	FLX10	3.4
UCFLX10-30	1-7/8												UCX10-30		
UCFLX10-31	1-15/16	8-1/2	7-1/4	1-1/32	23/32	1-23/32	3/4	5-1/4	2-11/32	2.1890	0.874	5/8	UCX10-31		
UCFLX10-32	2												UCX11-32		

UKFLX(Medium-duty)

Flange Units (Oval)
(with adapter mounted)

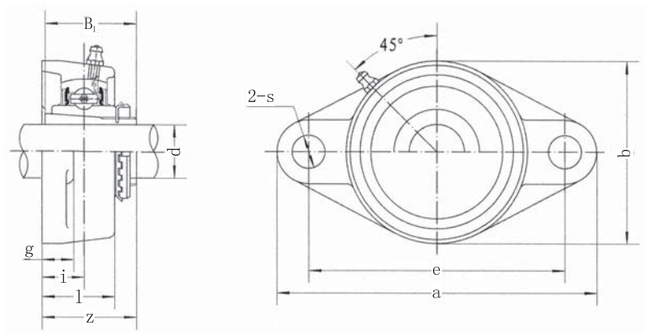

Unit No.	Dimensions mm / in.										Bolt Size mm / inch	Bearing No.	Housing No.	Weight (kg)
	d	a	e	i	g	l	s	b	z	B1				
UKFLX05;H2305	20	141	117	18	13	30	12	83	39	35	M10	UKX05;H2305	FLX05	1.0
UKFLX05;HE2305	3/4	5-9/16	4-39/64	45/64	1/2	1-3/16	15/32	3-9/32	1-17/32	1.378	3/8	UKX05;HE2305		
UKFLX06;H2306	25	156	130	19	15	34	16	95	41.5	38	M14	UKX06;H2306	FLX06	1.5
UKFLX06;HS2306	7/8	6-5/32	5-1/8	3/4	19/32	1-11/32	5/8	3-3/4	1-41/64	1.496	1/2	UKX06;HS2306		
UKFLX06;HE2306	1											UKX06;HE2306		
UKFLX07;H2307	30	171	144	21	16	38	16	105	45.5	43	M14	UKX07;H2307	FLX07	1.8
UKFLX07;HS2307	1-1/8	6-23/32	5-43/64	53/64	5/8	1-1/2	5/8	4-1/8	1-51/64	1.693	1/2	UKX07;HS2307		
UKFLX08;H2308	35	179	148	22	16	40	16	111	47.5	46	M14	UKX08;H2308	FLX08	2.1
UKFLX08;HE2308	1-1/4	7-1/16	5-53/64	55/64	5/8	1-9/16	5/8	4-3/8	1-7/8	1.811	1/2	UKX08;HE2308		
UKFLX08;HS2308	1-3/8											UKX08;HS2308		
UKFLX09;H2309	40	189	157	23	16	40	16	116	50	50	M14	UKX09;H2309	FLX09	2.5
UKFLX09;HA2309	1-7/16											UKX09;HA2309		
UKFLX09;HE2309	1-1/2	7-7/16	6-3/16	29/32	5/8	1-37/64	5/8	4-9/16	1-31/32	1.969	1/2	UKX09;HE2309		
UKFLX09;HS2309	1-5/8											UKX09;HS2309		
UKFLX10;H2310	45	216	184	26	18	44	19	133	55.5	55	M16	UKX10;H2310	FLX10	3.7
UKFLX10;HS2310	1-5/8											UKX10;HS2310		
UKFLX10;HA2310	1-11/16	8-1/2	7-1/4	1-1/32	23/32	1-23/32	3/4	5-1/4	2-3/16	2.165	5/8	UKX10;HA2310		
UKFLX10;HE2310	1-3/4											UKX10;HE2310		

Flange Units (Oval)

UCFL3(Heavy-duty)

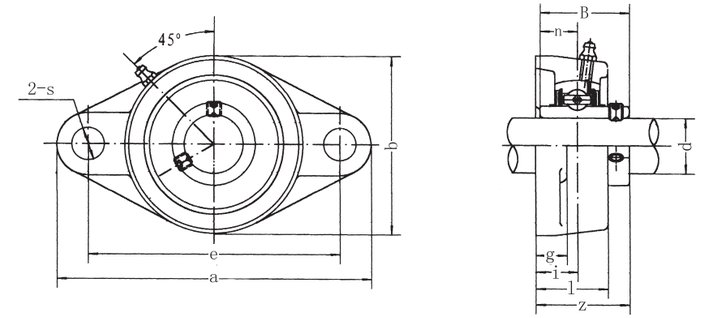

Unit No.	Dimensions mm / in.											Bolt Size mm / inch	Bearing No.	Housing No.	Weight (kg)
	d	a	e	i	g	l	s	b	z	B	n				
UCFL305	25	150	113	16	13	29	19	80	39	38	15	M16	UC305	FL305	1.1
UCFL305-13	13/16												UC305-13		
UCFL305-14	7/8	5-29/32	4-7/16	5/8	1/2	1-5/32	3/4	3-5/32	1-17/32	1.4961	0.591	5/8	UC305-14		
UCFL305-15	15/16												UC305-15		
UCFL305-16	1												UC305-16		
UCFL306	30	180	134	18	15	32	23	90	44	43	17	M20	UC306	FL306	1.5
UCFL306-17	1-1/16												UC306-17		
UCFL306-18	1-1/8	7-3/32	5-9/32	45/64	19/32	1-1/4	29/32	3-17/32	1-47/64	1.6929	0.669	3/4	UC306-18		
UCFL306-19	1-3/16												UC306-19		
UCFL307	35	185	141	20	16	36	23	100	49	48	19	M20	UC307	FL307	1.9
UCFL307-20	1-1/4												UC307-20		
UCFL307-21	1-5/16	7-9/32	5-35/64	25/32	5/8	1-13/32	29/32	3-15/16	1-59/64	1.8898	0.748	3/4	UC307-21		
UCFL307-22	1-3/8												UC307-22		
UCFL307-23	1-7/16												UC307-23		
UCFL308	40	200	158	23	17	40	23	112	56	52	19	M20	UC308	FL308	2.5
UCFL308-24	1-1/2	7-7/8	5-7/32	29/32	21/32	1-9/16	29/32	4-13/32	1-13/64	2.0472	0.748	3/4	UC308-24		
UCFL308-25	1-9/16												UC308-25		
UCFL309	45	230	177	25	18	44	25	125	60	57	22	M22	UC309	FL309	3.4
UCFL309-26	1-5/8												UC309-26		
UCFL309-27	1-11/16	9-1/16	6-31/32	63/64	23/32	1-23/32	63/64	4-29/32	2-23/64	2.2441	0.866	7/8	UC309-27		
UCFL309-28	1-3/4												UC309-28		
UCFL310	50	240	187	28	19	48	25	140	67	61	22	M22	UC310	FL310	4.4
UCFL310-29	1-13/16												UC310-29		
UCFL310-30	1-7/8	9-7/16	7-23/64	1-7/64	3/4	1-7/8	63/64	5-1/2	2-41/64	2.4016	0.866	7/8	UC310-30		
UCFL310-31	1-15/16												UC310-31		
UCFL311	55	250	198	30	20	52	25	150	71	66	25	M22	UC311	FL311	5.1
UCFL311-32	2												UC311-32		
UCFL311-33	2-1/16	9-27/32	7-51/64	1-3/16	25/32	2-1/16	63/64	5-29/32	2-51/64	2.5984	0.984	7/8	UC311-33		
UCFL311-34	2-1/8												UC311-34		
UCFL311-35	2-3/16												UC311-35		
UCFL312	60	270	212	33	22	56	31	160	78	71	26	M27	UC312	FL312	6.1
UCFL312-36	2-1/4												UC312-36		
UCFL312-37	2-5/16	10-5/8	8-11/32	1-19/64	7/8	2-7/32	1-7/32	6-5/64	3-5/64	2.9753	1.024	1	UC312-37		
UCFL312-38	2-3/8												UC312-38		
UCFL312-39	2-7/16												UC312-39		
UCFL313	65	295	240	33	25	58	31	175	78	75	30	M27	UC313	FL313	7.8
UCFL313-40	2-1/2	11-5/8	9-29/64	1-19/64	31/32	2-9/32	1-7/32	6-7/8	3-5/64	2.9528	1.181	1	UC313-40		
UCFL313-41	2-9/16												UC313-41		
UCFL314	70	315	250	36	28	61	35	185	81	78	33	M30	UC314	FL314	9.0
UCFL314-42	2-5/8												UC314-42		
UCFL314-43	2-11/16	12-13/32	9-27/32	1-27/64	1-3/32	2-13/32	1-3/8	7-9/32	3-3/16	3.0708	1.299	1-1/8	UC314-43		
UCFL314-44	2-3/4												UC314-44		
UCFL315	75	320	260	39	30	66	35	195	89	82	32	M30	UC315	FL315	10
UCFL315-45	2-13/16												UC315-45		
UCFL315-46	2-7/8	12-19/32	10-15/64	1-17/32	1-3/16	2-19/32	1-3/8	7-11/16	3-1/2	3.2283	1.260	1-1/8	UC315-46		
UCFL315-47	2-15/16												UC315-47		
UCFL315-48	3												UC315-48		
UCFL316	80	355	285	38	32	68	38	210	90	86	34	M33	UC316	FL316	13
UCFL316-49	3-1/16												UC316-49		
UCFL316-50	3-1/8	13-31/32	11-7/32	1-1/2	1-1/4	2-11/16	1-1/2	8-9/32	3-35/64	3.3858	1.339	1-1/4	UC316-50		
UCFL316-51	3-3/16												UC316-51		
UCFL317	85	370	300	44	32	74	38	220	100	96	40	M33	UC317	FL317	15
UCFL317-52	3-1/4												UC317-52		
UCFL317-53	3-5/16	14-9/16	11-13/16	1-47/64	1-1/4	2-29/32	1-1/2	8-21/32	3-15/16	3.7795	1.575	1-1/4	UC317-53		
UCFL317-55	3-7/16												UC317-55		
UCFL318	90	385	315	44	36	76	38	235	100	96	40	M33	UC318	FL318	18
UCFL318-55	3-7/16	15-5/32	12-13/32	1-47/64	1-13/32	3	1-1/2	9-1/4	3-15/16	3.7795	1.575	1-1/4	UC318-55		
UCFL318-56	3-1/2												UC318-56		
UCFL319	95	405	330	59	40	94	41	250	121	103	41	M36	UC319	FL319	22
UCFL319-58	3-5/8												UC319-58		
UCFL319-59	3-11/16	15-15/16	12-63/64	2-21/64	1-9/16	3-11/16	1-39/64	9-27/32	4-49/64	4.0551	1.614	1-3/8	UC319-59		
UCFL319-60	3-3/4												UC319-60		
UCFL320	100	440	360	59	40	94	44	270	125	108	42	M39	UC320	FL320	27
UCFL320-64	4	17-5/16	14-11/64	2-21/64	1-9/16	3-11/16	1-47/64	10-5/8	4-29/32	4.2519	1.6535	1-1/2	UC320-64		
UCFL322	110	470	390	60	42	96	44	300	131	117	46	M39	UC322	FL322	33
		18-1/2	15-23/64	2-23/64	1-21/32	3-25/32	1-47/64	11-13/16	5-5/32	4.6063	1.8110				
UCFL324	120	520	430	65	48	110	47	330	140	126	51	M42	UC324	FL324	48
		20-15/32	16-59/64	2-9/16	1-7/8	4-11/32	1-27/32	13	5-1/2	4.9606	2.0079				
UCFL326	130	550	460	65	50	115	47	360	146	135	54	M42	UC326	FL326	58
		21-21/32	18-7/64	2-9/16	1-31/32	4-17/32	1-27/32	14-3/16	5-3/4	5.1350	2.1260				
UCFL328	140	600	500	75	60	125	51	400	161	145	59	M45	UC328	FL328	81
		23-5/8	19-11/16	2-61/64	2-3/8	4-29/32	2	15-3/4	6-11/32	5.7086	2.3228				

UCT2 (Normal-duty)

Take-up Units

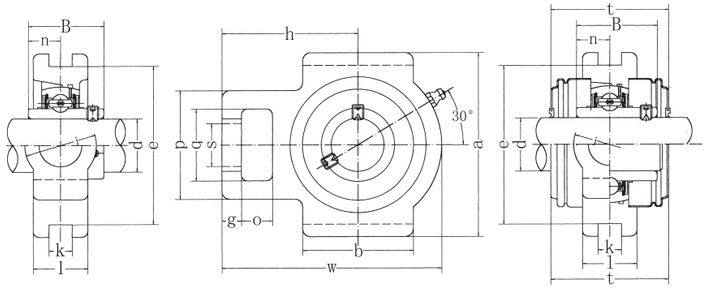

UCT-C1(D1)

Unit No.	Dimensions mm / in. d	O	g	p	q	S	b	k	e	a	w	j	l	h	t	B	n	Bearing No.	Housing No.	Weight (kg)
UCT201	12	16	10	51	32	19	51	12	76	89	94	32	21	61	44.5	31	12.7	UC201	T204	0.80
UCT201-8	1/2	5/8	25/64	2-1/64	1-1/4	3/4	2-1/64	15/32	2-63/64	3-1/2	3-11/16	1-1/4	13/16	2-13/32	1-3/4	1.2205	0.500	UC201-8		0.79
UCT202	15	16	10	51	32	19	51	12	76	89	94	32	21	61	44.5	31	12.7	UC202	T204	0.79
UCT202-9	9/16	5/8	25/64	2-1/64	1-1/4	3/4	2-1/64	15/32	2-63/64	3-1/2	3-11/16	1-1/4	13/16	2-13/32	1-3/4	1.2205	0.500	UC202-9		0.79
UCT202-10	5/8																	UC202-10		0.79
UCT203	17	16	10	51	32	19	51	12	76	89	94	32	21	61	44.5	31	12.7	UC203	T204	0.78
UCT203-11	11/16	5/8	25/64	2-1/64	1-1/4	3/4	2-1/64	15/32	2-63/64	3-1/2	3-11/16	1-1/4	13/16	2-13/32	1-3/4	1.2205	0.500	UC203-11		0.77
UCT204	20	16	10	51	32	19	51	12	76	89	94	32	21	61	44.5	31	12.7	UC204	T204	0.76
UCT204-12	3/4	5/8	25/64	2-1/64	1-1/4	3/4	2-1/64	15/32	2-63/64	3-1/2	3-11/16	1-1/4	13/16	2-13/32	1-3/4	1.2205	0.500	UC204-12		0.76
UCT205	25	16	10	51	32	19	51	12	76	89	97	32	24	62	48	34.1	14.3	UC205	T205	0.81
UCT205-13	13/16																	UC205-13		0.85
UCT205-14	7/8	5/8	25/64	2-1/64	1-1/4	3/4	2-1/64	15/32	2-63/64	3-1/2	3-13/16	1-1/4	15/16	2-7/16	1-7/8	1.3425	0.563	UC205-14		0.84
UCT205-15	15/16																	UC205-15		0.82
UCT205-16	1																	UC205-16		0.81
UCT206	30	16	10	56	37	22	57	12	89	102	113	37	28	70	53	38.1	15.9	UC206	T206	1.22
UCT206-17	1-1/16																	UC206-17		1.23
UCT206-18	1-1/8	5/8	25/64	2-7/32	1-29/64	55/64	2-1/4	15/32	3-1/2	4-1/64	4-29/64	1-29/64	1-3/32	2-3/4	2-3/32	1.5000	0.626	UC206-18		1.24
UCT206-19	1-3/16																	UC206-19		1.22
UCT206-20	1-1/4																	UC206-20		1.21
UCT207	35	16	13	64	37	22	64	12	89	102	129	37	30	78	59.5	42.9	17.5	UC207	T207	1.44
UCT207-20	1-1/4																	UC207-20		1.50
UCT207-21	1-5/16	5/8	33/64	2-33/64	1-29/64	55/64	2-33/64	15/32	3-1/2	4-1/64	5-5/64	1-29/64	1-3/16	3-5/64	2-11/32	1.6890	0.689	UC207-21		1.46
UCT207-22	1-3/8																	UC207-22		1.44
UCT207-23	1-7/16																	UC207-23		1.41
UCT208	40	19	16	83	49	29	83	16	102	114	144	49	33	89	69	49.2	19	UC208	T208	2.40
UCT208-24	1-1/2	3/4	5/8	3-17/64	1-15/16	1-9/64	3-17/64	5/8	4-1/64	4-31/64	5-43/64	1-15/16	1-5/16	3-1/2	2-23/32	1.9370	0.748	UC208-24		2.44
UCT208-25	1-9/16																	UC208-25		2.41
UCT209	45	19	16	83	49	29	83	16	102	117	144	49	35	87	69	49.2	19	UC209	T209	2.36
UCT209-26	1-5/8																	UC209-26		2.46
UCT209-27	1-11/16	3/4	5/8	3-17/64	1-15/16	1-9/64	3-17/64	5/8	4-1/64	4-39/64	5-43/64	1-15/16	1-3/8	3-27/64	2-23/32	1.9370	0.748	UC209-27		2.42
UCT209-28	1-3/4																	UC209-28		2.38
UCT210	50	19	16	83	49	29	86	16	102	117	149	49	37	90	74.5	51.6	19	UC210	T210	2.43
UCT210-29	1-13/16																	UC210-29		2.55
UCT210-30	1-7/8	3/4	5/8	3-17/64	1-15/16	1-9/64	3-17/64	5/8	4-1/64	4-39/64	5-55/64	1-15/16	1-15/32	3-35/64	2-15/16	2.0315	0.748	UC210-30		2.50
UCT210-31	1-15/16																	UC210-31		2.45
UCT210-32	2																	UC210-32		2.41
UCT211	55	25	19	102	64	35	95	22	130	146	171	64	38	106	76	55.6	22.2	UC211	T211	4.11
UCT211-32	2																	UC211-32		4.26
UCT211-33	2-1/16	63/64	3/4	4-1/64	2-1/32	1-3/8	3-3/4	55/64	5-1/8	5-3/4	6-47/64	2-33/64	1-1/2	4-11/64	3	2.1890	0.874	UC211-33		4.20
UCT211-34	2-1/8																	UC211-34		4.15
UCT211-35	2-3/16																	UC211-35		4.09
UCT212	60	32	19	102	64	35	102	22	130	146	194	64	42	119	89	65.1	25.4	UC212	T212	4.97
UCT212-36	2-1/4																	UC212-36		5.10
UCT212-37	2-5/16	1-17/64	3/4	4-1/64	2-1/32	1-3/8	4-1/64	55/64	5-1/8	5-3/4	7-41/64	2-33/64	1-21/32	4-11/16	3-1/2	2.5630	1.000	UC212-37		5.02
UCT212-38	2-3/8																	UC212-38		4.95
UCT212-39	2-7/16																	UC212-39		4.88
UCT213	65	32	21	111	70	41	121	26	151	167	224	70	44	137	89	65.1	25.4	UC213	T213	6.65
UCT213-40	2-1/2	1-17/64	53/64	4-3/8	2-3/4	1-39/64	4-49/64	1-1/32	5-15/16	6-37/64	8-13/16	2-3/4	1-23/32	5-25/64	3-1/2	2.5630	1.000	UC213-40		6.74
UCT213-41	2-9/16																	UC213-41		6.65
UCT214	70	32	21	111	70	41	121	26	151	167	224	70	46	137		74.6	30.2	UC214	T214	7.05
UCT214-42	2-5/8																	UC214-42		7.26
UCT214-43	2-11/16	1-17/64	53/64	4-3/8	2-3/4	1-39/64	4-49/64	1-1/32	5-15/16	6-37/64	8-13/16	2-3/4	1-13/16	5-25/64		2.9370	1.189	UC214-43		7.16
UCT214-44	2-3/4																	UC214-44		7.06
UCT215	75	32	21	111	70	41	121	26	151	167	232	70	48	140		77.8	33.3	UC215	T215	7.41
UCT215-45	2-13/16																	UC215-45		7.66
UCT215-46	2-7/8	1-17/64	53/64	4-3/8	2-3/4	1-39/64	4-49/64	1-1/32	5-15/16	6-37/64	9-9/64	2-3/4	1-57/64	5-33/64		3.0630	1.311	UC215-46		7.55
UCT215-47	2-15/16																	UC215-47		7.44
UCT215-48	3																	UC215-48		7.32
UCT216	80	32	21	111	70	41	121	26	165	184	235	70	51	140		82.6	33.3	UC216	T216	8.30
UCT216-49	3-1/16	1-17/64	53/64	4-3/8	2-3/4	1-39/64	4-49/64	1-1/32	6-1/2	7-1/4	9-1/4	2-3/4	2	5-33/64		3.2520	1.311	UC216-49		8.48
UCT216-50	3-1/8																	UC216-50		8.35
UCT216-51	3-3/16																	UC216-51		8.22
UCT217	85	38	29	124	73	48	157	30	173	198	260	73	54	162		85.7	34.1	UC217	T217	11.00
UCT217-52	3-1/4																	UC217-52		11.22
UCT217-53	3-5/16	1-1/2	1-9/64	4-7/8	2-7/8	1-57/64	6-3/16	1-3/16	6-13/16	7-51/64	10-15/64	2-7/8	2-1/8	6-3/8		3.3740	1.343	UC217-53		11.09
UCT217-55	3-7/16																	UC217-55		10.80

Take-up Units

HCT2 (Normal-duty)

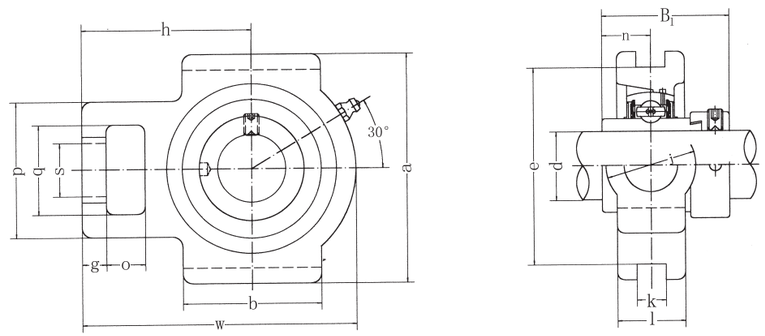

Unit No.	Dimensions mm / in. d	0	g	p	q	s	b	k	e	a	w	j	l	h	B1	n	Bearing No.	Housing No.	Weight (kg)
HCT204	20	16	10	51	32	19	51	12	76	89	94	32	21	61	43.7	17.1	HC204	T204	0.83
HCT204-12	3/4	5/8	25/64	1-1/16	1-1/4	3/4	2-1/64	15/32	2-63/64	3-1/2	3-11/16	1-1/4	13/16	2-13/32	1.720	0.673	HC204-12		0.83
HCT205	25	16	10	51	32	19	51	12	76	89	97	32	24	62	44.4	17.5	HC205	T205	0.88
HCT205-13	13/16																HC205-13		0.93
HCT205-14	7/8	5/8	25/64	1-1/16	1-1/4	3/4	2-1/64	15/32	2-63/64	3-1/2	3-13/16	1-1/4	15/16	2-7/16	1.748	0.689	HC205-14		0.92
HCT205-15	15/16																HC205-15		0.90
HCT205-16	1																HC205-16		0.88
HCT206	30	16	10	56	37	22	57	12	89	102	113	37	28	70	48.4	18.3	HC206	T206	1.35
HCT206-17	1-1/16																HC206-17		1.40
HCT206-18	1-1/8	5/8	25/64	2-7/32	1-29/64	55/64	2-1/4	15/32	3-1/2	4-1/64	4-29/64	4-29/64	1-3/32	2-3/4	1.906	0.720	HC206-18		1.37
HCT206-19	1-3/16																HC206-19		1.35
HCT206-20	1-1/4																HC206-20		1.32
HCT207	35	16	13	64	37	22	64	12	89	102	129	37	30	78	51.1	18.8	HC207	T207	1.56
HCT207-20	1-1/4																HC207-20		1.63
HCT207-21	1-5/16	5/8	33/64	2-33/64	1-29/64	55/64	2-33/64	15/32	3-1/2	4-1/64	5-5/64	1-29/64	1-3/16	3-5/64	2.012	0.740	HC207-21		1.59
HCT207-22	1-3/8																HC207-22		1.56
HCT207-23	1-7/16																HC208-23		1.53
HCT208	40	19	16	83	49	29	83	16	102	114	144	49	33	89	56.3	21.4	HC208	T208	2.55
HCT208-24	1-1/2	3/4	5/8	3-17/64	1-15/16	1-9/64	3-17/64	5/8	4-1/64	4-31/64	4-43/64	1-15/16	1-5/16	3-1/2	2.217	0.843	HC208--24		2.60
HCT208-25	1-9/16																HC208-25		2.56
HCT209	45	19	16	83	49	29	83	16	102	117	144	49	35	87	56.3	21.4	HC209	T209	2.53
HCT209-26	1-5/8																HC209-26		2.64
HCT209-27	1-11/16	3/4	5/8	3-17/64	1-15/16	1-9/64	3-17/64	5/8	4-1/64	4-39/64	5-43/64	1-15/16	1-3/8	3-27/64	2.217	0.843	HC209-27		2.59
HCT209-28	1-3/4																HC209-28		2.55
HCT210	50	19	16	83	49	29	86	16	102	117	149	49	37	90	62.7	24.6	HC210	T210	2.62
HCT210-29	1-13/16																HC210-29		2.77
HCT210-30	1-7/8	3/4	5/8	3-17/64	1-15/16	1-9/64	3-25/64	5/8	4-1/64	4-39/64	5-55/64	1-15/16	1-15/32	3-35/64	2.469	0.969	HC210-30		2.71
HCT210-31	1-15/16																HC210-31		2.65
HCT210-32	2																HC210-32		2.59
HCT211	55	25	19	102	64	35	95	22	130	146	171	64	38	106	71.4	27.8	HC211	T211	4.32
HCT211-32	2																HC211-32		4.52
HCT211-33	2-1/16	63/64	3/4	4-1/64	2-1/32	1-3/8	3-3/4	55/64	5-1/8	5-3/4	6-47/64	2-33/64	1-1/2	4-11/64	2.811	1.094	HC211-33		4.44
HCT211-34	2-1/8																HC211-34		4.37
HCT211-35	2-3/16																HC211-35		4.29
HCT212	60	32	19	102	64	35	102	22	130	146	194	64	42	119	77.8	31	HC212	T212	5.31
HCT212-36	2-1/4																HC212-36		5.47
HCT212-37	2-5/16	1-17/64	3/4	4-1/64	2-1/32	1-3/8	4-1/64	55/64	5-1/8	5-3/4	7-41/64	2-33/64	1-21/32	4-11/16	3.063	1.220	HC212-37		5.38
HCT212-38	2-3/8																HC212-38		5.33
HCT212-39	2-7/16																HC212-39		5.20
HCT213	65	32	21	111	70	41	121	26	151	167	224	70	44	137	85.7	34.1	HC213	T213	7.21
HCT213--40	2-1/2	1-17/64	53/64	4-3/8	2-3/4	1-39/64	4-49/64	1-1/32	5-15/16	6-37/64	8-13/16	2-3/4	1-47/64	5-25/64	3.374	1.343	HC213-40		7.31
HCT213-41	2-9/16																HC213-41		7.20
HCT214	70	32	21	111	70	41	121	26	151	167	224	70	46	137	85.7	34.1	HC214	T214	7.55
HCT214-42	2-3/8																HC214-42		7.79
HCT214-43	2-11/16	1-17/64	53/64	4-3/8	2-3/4	1-39/64	4-49/64	1-1/32	5-15/16	6-37/64	8-13/16	2-3/4	1-13/16	5-25/64	3.374	1.343	HC214-43		7.68
HCT214-44	2-3/4																HC214-44		7.56
HCT215	75	32	21	111	70	41	121	26	151	167	232	70	48	140	92.1	37.3	HC215	T215	8.04
HCT215-45	2-13/16																HC215-45		8.34
HCT215-46	2-7/8	1-17/64	53/64	4-3/8	2-3/4	1-39/64	4-49/64	1-1/32	5-15/16	6-37/64	9-9/64	2-3/4	1-57/64	5-33/64	3.626	1.426	HC215-46		8.21
HCT215-47	2-15/16																HC215-47		8.08
HCT215-48	3																HC215-48		7.94

UKT2 (Normal-duty)

Take-up Units
(with adapter mounted)

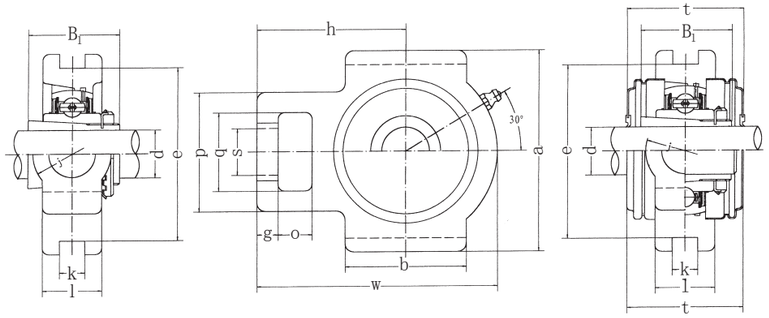

UKT-C1(D1)

Unit No.	Dimensions mm / in.																Bearing No.	Housing No.	Weight (kg)
	d	o	g	p	q	s	b	k	e	a	w	j	l	h	t	B			
UKT205;H2305	20	16	10	51	32	19	51	12	76	89	97	32	24	62	48	35	UK205;H2305	T205	0.86
UKT205;HE2305	3/4	5/8	25/64	1-1/64	1-1/4	3/4	2-1/64	15/32	2-63/64	3-1/2	3-13/16	1-1/4	15/16	2-7/16	1-7/8	1.378	UK205;HE2305		
UKT206;H2306	25	16	10	56	37	22	57	12	89	102	113	37	28	70	53	38	UK206;H2306	T206	1.26
UKT206;HS2306	7/8	5/8	25/64	2-7/32	1-15/32	55/64	2-1/4	15/32	3-1/2	4-1/64	4-29/64	1-29/64	1-3/32	2-3/4	2-3/32	1.496	UK206;HS2306		
UKT206;HE2306	1																UK206;HE2306		
UKT207;H2307	30	16	13	64	37	22	64	12	89	102	129	37	30	78	59.5	43	UK207;H2307	T207	2.50
UKT207;HS2307	1-1/8	5/8	33/64	2-33/64	1-15/32	55/64	2-33/64	15/32	3-1/2	4-1/64	5-5/64	1-29/64	1-3/16	3-5/64	2-11/32	1.693	UK207;HS2307		
UKT208;H2308	35	19	16	83	49	29	83	16	102	114	144	49	33	89	69	46	UK208;H2308	T208	2.50
UKT208;HE2308	1-1/4	3/4	5/8	3-17/64	1-15/16	1-9/64	3-17/64	5/8	4-1/64	4-31/64	5-43/64	1-15/16	1-5/16	3-1/2	2-23/32	1.811	UK208;HE2308		
UKT208;HS2308	1-3/8																UK208;HS2308		
UKT209;H2309	40	19	16	83	49	29	83	16	102	117	144	49	35	87	69	50	UK209;H2309	T209	2.51
UKT209;HA2309	1-7/16																UK209;HA2309		
UKT209;HE2309	1-1/2	3/4	5/8	3-17/64	1-15/16	1-9/64	3-17/64	5/8	4-1/64	4-39/64	5-43/64	1-15/16	1-3/8	3-27/64	2-23/32	1.969	UK209;HE2309		
UKT209;HS2309	1-5/8																UK209;HS2309		
UKT210;H2310	45	19	16	83	49	29	86	16	102	117	149	49	37	90	74.5	55	UK210;H2310	T210	2.60
UKT210;HS2310	1-5/8																UK210;HS2310		
UKT210;HA2310	1-11/16	3/4	5/8	3-17/64	1-15/16	1-9/64	3-25/64	5/8	4-1/64	4-39/64	5-55/64	1-15/16	1-15/32	3-35/64	2-15/16	2.165	UK210;HA2310		
UKT210;HE2310	1-3/4																UK210;HE2310		
UKT211;H2311	50	25	19	102	64	35	95	22	130	146	171	64	38	106	76	59	UK211;H2311	T211	4.26
UKT211;HS2311	1-7/8																UK211;HS2311		
UKT211;HA2311	1-15/16	63/64	3/4	4-1/64	2-1/32	1-3/8	3-3/4	55/64	5-1/8	5-3/4	6-47/64	2-33/64	1-1/2	4-11/64	3	2.323	UK211;HA2311		
UKT211;HE2311	2																UK211;HE2311		
UKT212;H2312	55	32	19	102	64	35	102	22	130	146	194	64	42	119	89	62	UK212;H2312	T212	5.02
UKT212;HS2312	2-1/8	1-17/64	3/4	4-1/64	2-1/32	1-3/8	4-1/64	55/64	5-1/8	5-3/4	7-41/64	2-33/64	1-21/32	4-11/16	3-1/2	2.441	UK212;HS2312		
UKT213;H2313	60	32	21	111	70	41	121	26	151	167	224	70	44	137	89	65	UK213;H2313	T213	6.56
UKT213;HA2313	2-3/16																UK213;HA2313		
UKT213;HE2313	2-1/4	1-17/64	53/64	4-3/8	2-3/4	1-39/64	4-49/64	1-1/32	5-15/16	6-37/64	8-13/16	2-3/4	1-47/64	5-25/64	3-1/2	2.559	UK213;HE2313		
UKT213;HS2313	2-3/8																UK213;HS2313		
UKT215;H2315	65	32	21	111	70	41	121	26	151	167	232	70	48	140		73	UK215;H2315	T215	7.52
UKT215;HA2315	2-7/16	1-17/64	53/64	4-3/8	2-3/4	1-39/64	4-49/64	1-1/32	5-15/16	6-37/64	9-9/64	2-3/4	1-57/64	5-33/64		2.874	UK215;HA2315		
UKT215;HE2315	2-1/2																UK215;HE2315		
UKT216;H2316	70	32	21	111	70	41	121	26	165	184	235	70	51	140		78	UK216;H2316	T216	8.56
UKT216;HA2316	2-11/16	1-17/64	53/64	4-3/8	2-3/4	1-39/64	4-49/64	1-1/32	6-1/2	7-1/4	9-1/4	2-3/4	2	5-33/64		3.071	UK216;HA2316		
UKT216;HE2316	2-3/4																UK216;HE2316		
UKT217;H2317	75	38	29	124	73	48	157	30	173	198	260	73	54	162		82	UK217;H2317	T217	11.38
UKT217;HA2317	2-15/16	1-1/2	1-9/64	4-7/8	2-7/8	1-57/64	6-3/16	1-3/16	6-13/16	7-51/64	10-15/64	2-7/8	2-1/8	6-3/8		3.228	UK217;HA2317		
UKT217;HE2317	3																UK217;HE2317		

Take-up Units

UCST2 (Normal-duty)

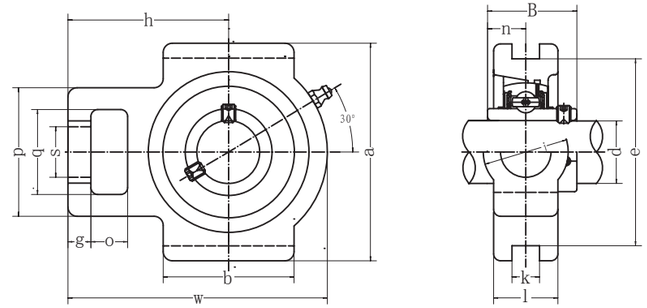

Unit No.	Dimensions mm / in.																Bearing No.	Housing No.	Weight (kg)
	d	o	g	p	q	s	b	k	e	a	w	j	l	h	B	n			
UCST201	12	16	10	51	32	19	51	13.5	76	89	94	32	24	60	31	12.7	UC201	ST204	0.87
UCST201-8	1/2	5/8	25/64	1-1/64	1-1/4	3/4	2-1/64	17/32	2-63/64	3-1/2	3-11/16	1-1/4	15/16	2-13/32	1.2205	0.500	UC201-8		0.86
UCST202	15	16	10	51	32	19	51	13.5	76	89	94	32	24	60	31	12.7	UC202	ST204	0.86
UCST202-9	9/16	5/8	25/64	1-1/64	1-1/4	3/4	2-1/64	17/32	2-63/64	3-1/2	3-11/16	1-1/4	15/16	2-13/32	1.2205	0.500	UC202-9		0.86
UCST202-10	5/8																UC202-10		0.86
UCST203	17	16	10	51	32	19	51	13.5	76	89	94	32	24	60	31	12.7	UC203	ST204	0.85
UCST203-11	11/16	5/8	25/64	1-1/64	1-1/4	3/4	2-1/64	17/32	2-63/64	3-1/2	3-11/16	1-1/4	15/16	2-13/32	1.2205	0.500	UC203-11		0.84
UCST204	20	16	10	51	32	19	51	13.5	76	89	94	32	24	60	31	12.7	UC204	ST204	0.83
UCST204-12	3/4	5/8	25/64	1-1/64	1-1/4	3/4	2-1/64	17/32	2-63/64	3-1/2	3-11/16	1-1/4	15/16	2-13/32	1.2205	0.500	UC204-12		0.83
UCST205	25	16	10	51	32	22	51	13.5	76	89	97	32	24	62	34.1	14.3	UC205	ST205	0.81
UCST205-13	13/16																UC205-13		0.85
UCST205-14	7/8																UC205-14		0.84
UCST205-15	15/16	5/8	25/64	1-1/64	1-1/4	55/64	2-1/64	17/32	2-63/64	3-1/2	3-13/16	1-1/4	15/16	2-7/16	1.3425	0.563	UC205-15		0.82
UCST205-16	1																UC205-16		0.81
UCST206	30	16	10	56	37	22	57	13.5	89	102	113	37	24	70	38.1	15.9	UC206	ST206	1.08
UCST206-17	1-1/16																UC206-17		1.10
UCST206-18	1-1/8																UC206-18		0.97
UCST206-19	1-3/16	5/8	25/64	2-7/32	1-15/32	55/64	2-1/4	17/32	3-1/2	4-1/64	4-29/64	1-29/64	15/16	2-3/4	1.5000	0.626	UC206-19		1.09
UCST206-20	1-1/4																UC206-20		1.08
UCST207	35	16	13	64	37	22	64	13.5	89	102	129	37	30	78	42.9	17.5	UC207	ST207	1.44
UCST207-20	1-1/4																UC207-20		1.50
UCST207-21	1-5/16																UC207-21		1.46
UCST207-22	1-3/8	5/8	33/64	2-33/64	1-29/64	55/64	2-33/64	17/32	3-1/2	4-1/64	5-5/64	1-29/64	1-3/16	3-5/64	1.6890	0.689	UC207-22		1.44
UCST207-23	1-7/16																UC207-23		1.41
UCST208	40	19	16	83	49	29	83	17.5	102	114	144	49	33	89	49.2	19	UC208	ST208	2.40
UCST208-24	1-1/2	3/4	5/8	3-17/64	1-15/16	1-9/64	3-17/64	11/16	4-1/64	4-31/64	5-43/64	1-15/16	1-19/64	3-1/2	1.9370	0.748	UC208-24		2.44
UCST208-25	1-9/16																UC208-25		2.41
UCST209	45	19	16	83	49	29	83	17.5	102	117	144	49	35	87	49.2	19	UC209	ST209	2.36
UCST209-26	1-5/8																UC209-26		2.46
UCST209-27	1-11/16	3/4	5/8	3-17/64	1-15/16	1-9/64	3-17/64	11/16	4-1/64	4-39/64	5-43/64	1-15/16	1-3/8	3-27/64	1.9370	0.748	UC209-27		2.42
UCST209-28	1-3/4																UC209-28		2.38
UCST210	50	19	16	83	49	29	83	17.5	102	117	149	49	35	90	51.6	19	UC210	ST210	2.33
UCST210-29	1-13/16																UC210-29		2.45
UCST210-30	1-7/8																UC210-30		2.40
UCST210-31	1-15/16	3/4	5/8	3-17/64	1-15/16	1-9/64	3-17/64	11/16	4-1/64	4-39/64	5-55/64	1-15/16	1-3/8	3-35/64	2.0315	0.748	UC210-31		2.35
UCST210-32	2																UC210-32		2.31
UCST211	55	25	19	102	64	35	95	27	130	146	171	64	41	106	55.6	22.2	UC211	ST211	4.27
UCST211-32	2																UC211-32		4.42
UCST211-33	2-1/16																UC211-33		4.36
UCST211-34	2-1/8	63/64	3/4	4-1/64	2-1/32	1-3/8	3-3/4	1-1/16	5-1/8	5-3/4	6-47/64	2-33/64	1-5/8	4-11/64	2.1890	0.874	UC211-34		4.31
UCST211-35	2-3/16																UC211-35		4.25
UCST212	60	32	19	102	64	35	102	27	130	146	194	64	46	119	65.1	25.4	UC212	ST212	5.22
UCST212-36	2-1/4																UC212-36		5.35
UCST212-37	2-5/16																UC212-37		5.27
UCST212-38	2-3/8	1-17/64	3/4	4-1/64	2-1/32	1-3/8	4-1/64	1-1/16	5-1/8	5-3/4	7-41/64	2-33/64	1-13/16	4-11/16	2.5630	1.000	UC212-38		5.2
UCST212-39	2-7/16																UC212-39		5.13
UCST213	65	32	21	111	70	41	121	27	151	167	224	70	51	137	65.1	25.4	UC213	ST213	7.43
UCST213-40	2-1/2	1-17/64	53/64	4-3/8	2-3/4	1-39/64	4-49/64	1-1/16	5-15/16	6-37/64	8-13/16	2-3/4	2	5-25/64	2.5630	1.000	UC213-40		7.52
UCST213-41	2-9/16																UC213-41		7.43

UCCT2(Normal-duty)

Take-up Units

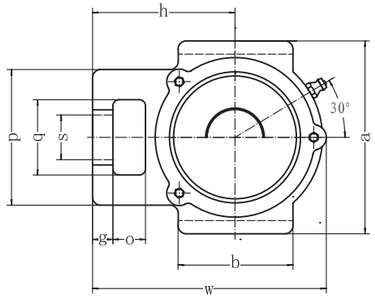

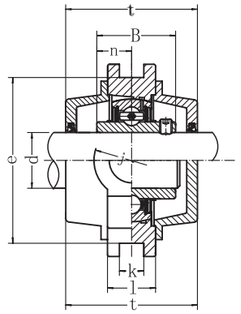

Unit No.	Dimensions mm in. d	o	g	p	q	s	b	k	e	a	w	j	l	h	t	B	n	Bearing No.	Housing No.	Weight (kg)
UCCT204	20	16	10	51	32	19	51	12	76	89	94	32	21	61	62	31	12.7	UC204	CT204	0.68
UCCT204-12	3/4	5/8	25/64	1-1/64	1-1/4	3/4	2-1/64	15/32	2-63/64	3-1/2	3-11/16	1-1/4	53/64	2-13/32	2-7/16	1.2205	0.500	UC204-12		0.68
UCCT205	25	16	10	51	32	19	51	12	76	89	100	32	24	62	70	34.1	14.3	UC205	CT205	0.93
UCCT205-13	13/16																	UC205-13		0.97
UCCT205-14	7/8																	UC205-14		0.96
UCCT205-15	15/16	5/8	25/64	1-1/64	1-1/4	3/4	2-1/64	15/32	2-63/64	3-1/2	3-15/16	1-1/4	15/16	2-7/16	2-3/4	1.3425	0.563	UC205-15		0.94
UCCT205-16	1																	UC205-16		0.93
UCCT206	30	16	10	56	37	22	57	12	89	102	113	37	28	70	74	38.1	15.9	UC206	CT206	1.33
UCCT206-17	1-1/16																	UC206-17		1.34
UCCT206-18	1-1/8																	UC206-18		1.35
UCCT206-19	1-3/16	5/8	25/64	2-7/32	1-15/32	55/64	2-1/4	15/32	3-1/2	4-1/64	4-29/64	1-29/64	1-3/32	2-3/4	2-29/32	1.5000	0.626	UC206-19		1.33
UCCT206-20	1-1/4																	UC206-20		1.32
UCCT207	35	16	13	64	37	22	64	12	89	102	129	37	30	78	80	42.9	17.5	UC207	CT207	2.00
UCCT207-20	1-1/4																	UC207-20		2.06
UCCT207-21	1-5/16																	UC207-21		2.03
UCCT207-22	1-3/8	5/8	33/64	2-33/64	1-29/64	55/64	2-33/64	15/32	3-1/2	4-1/64	5-5/64	1-29/64	1-3/16	3-5/64	3-5/32	1.6890	0.689	UC207-22		2.00
UCCT207-23	1-7/16																	UC207-23		1.97
UCCT208	40	19	16	83	49	29	83	16	102	114	144	49	33	89	90	49.2	19	UC208	CT208	2.81
UCCT208-24	1-1/2																	UC208-24		2.85
UCCT208-25	1-9/16	3/4	5/8	3-17/64	1-15/16	1-9/64	3-17/64	5/8	4-1/64	4-31/64	5-43/64	1-15/16	1-19/64	3-1/2	3-35/64	1.9370	0.748	UC208-25		2.82
UCCT209	45	19	16	83	49	29	83	16	102	117	145	49	35	87	90	49.2	19	UC209	CT209	2.80
UCCT209-26	1-5/8																	UC209-26		2.90
UCCT209-27	1-11/16	3/4	5/8	3-17/64	1-15/16	1-9/64	3-17/64	5/8	4-1/64	4-39/64	5-45/64	1-15/16	1-3/8	3-27/64	3-35/64	1.9370	0.748	UC209-27		2.86
UCCT209-28	1-3/4																	UC209-28		2.82
UCCT210	50	19	16	83	49	29	86	16	102	117	151	49	37	90	98	51.6	19	UC210	CT210	3.06
UCCT210-29	1-13/16																	UC210-29		3.18
UCCT210-30	1-7/8	3/4	5/8	3-17/64	1-15/16	1-9/64	3-25/64	5/8	4-1/64	4-39/64	5-5/16	1-15/16	1-27/64	3-35/64	3-55/64	2.0315	0.748	UC210-30		3.13
UCCT210-31	1-15/16																	UC210-31		3.08
UCCT210-32	2																	UC210-32		3.04
UCCT211	55	25	19	102	64	35	95	22	130	146	174	64	38	106	100	55.6	22.2	UC211	CT211	4.17
UCCT211-32	2																	UC211-32		4.32
UCCT211-33	2-1/16																	UC211-33		4.26
UCCT211-34	2-1/8	63/64	3/4	4-1/64	2-1/32	1-3/8	3-3/4	55/64	5-1/8	5-3/4	6-27/32	2-33/64	1-1/2	4-11/64	3-15/16	2.1890	0.874	UC211-34		4.21
UCCT211-35	2-3/16																	UC211-35		4.15
UCCT212	60	32	19	102	64	35	102	22	130	146	194	64	42	119	114	65.1	25.4	UC212	CT212	5.87
UCCT212-36	2-1/4																	UC212-36		6.00
UCCT212-37	2-5/16																	UC212-37		5.92
UCCT212-38	2-3/8	1-17/64	3/4	4-1/64	2-1/32	1-3/8	4-1/64	55/64	5-1/8	5-3/4	7-41/64	2-33/64	1-21/32	4-11/16	4-31/64	2.5630	1.000	UC212-38		5.85
UCCT212-39	2-7/16																	UC212-39		5.78
UCCT213	65	32	21	111	70	41	121	26	151	167	224	70	44	137	118	65.1	25.4	UC213	CT213	8.18
UCCT213-40	2-1/2																	UC213-40		8.27
UCCT213-41	2-9/16	1-17/64	53/64	4-3/8	2-3/4	1-39/64	4-49/64	1-1/32	5-15/16	6-37/64	8-13/16	2-3/4	1-47/64	5-25/64	4-41/64	2.5630	1.000	UC213-41		8.18
UCCT214	70	32	21	111	70	41	121	26	151	167	224	70	46	137	134	74.6	30.2	UC214	CT214	8.30
UCCT214-42	2-5/8																	UC214-42		8.51
UCCT214-43	2-11/16	1-17/64	53/64	4-3/8	2-3/4	1-39/64	4-49/64	1-1/32	5-15/16	6-37/64	8-13/16	2-3/4	1-13/16	5-25/64	5-9/32	2.9370	1.189	UC214-43		8.41
UCCT214-44	2-3/4																	UC214-44		8.31
UCCT215	75	32	21	111	70	41	121	26	151	167	232	70	48	140	136	77.8	33.3	UC215	CT215	9.31
UCCT215-45	2-13/16																	UC215-45		9.56
UCCT215-46	2-7/8																	UC215-46		9.45
UCCT215-47	2-15/16	1-17/64	53/64	4-3/8	2-3/4	1-39/64	4-49/64	1-1/32	5-15/16	6-37/64	9-9/64	2-3/4	1-57/64	5-33/64	5-23/64	0.0630	1.311	UC215-47		9.34
UCCT215-48	3																	UC215-48		9.22
UCCT216	80	32	21	111	70	41	121	26	165	184	236	70	51	140	146	82.6	33.3	UC216	CT216	10.90
UCCT216-49	3-1/16																	UC216-49		11.08
UCCT216-50	3-1/8	1-17/64	53/64	4-3/8	2-3/4	1-39/64	4-49/64	1-1/32	6-1/2	7-1/4	9-19/64	2-3/4	2-1/64	5-33/64	5-3/4	3.2520	1.311	UC216-50		10.95
UCCT216-51	3-3/16																	UC216-51		10.82
UCCT217	85	38	29	124	73	48	157	30	173	198	263	73	54	162	150	85.7	34.1	UC217	CT217	13.26
UCCT217-52	3-1/4																	UC217-52		13.48
UCCT217-53	3-5/16	1-1/2	1-9/64	4-7/8	2-7/8	1-57/64	6-3/16	1-3/16	6-13/16	7-51/64	10-23/64	2-7/8	2-1/8	6-3/8	5-29/32	3.3740	1.343	UC217-53		13.34
UCCT217-55	3-7/16																	UC217-55		13.05

Take-up Units

UCTX (Medium-duty)

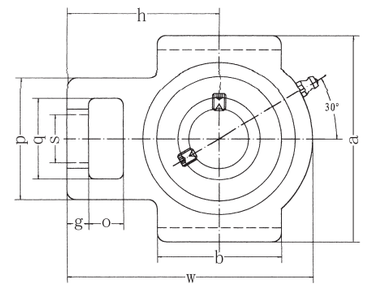

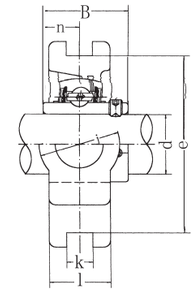

Unit No.	Dimensions mm in. d	o	g	P	q	s	b	k	e	a	w	i	j	h	B	n	Bearing No.	Housing No.	Weight (kg)
UCTX05	25	16	12	56	37	22	57	12	89	102	113	28	37	70	38.1	15.9	UCX05	TX05	1.4
UCTX05-13	13/16																UCX05-13		
UCTX05-14	7/8																UCX05-14		
UCTX05-15	15/16	5/8	15/32	2-7/32	1-15/32	55/64	2-1/4	0.472	3-1/2	4-1/64	4-29/64	1-3/32	1-29/64	2-3/4	1.5000	0.626	UCX05-15		
UCTX05-16	1																UCX05-16		
UCTX06	30	16	15	64	37	22	64	12	89	102	129	30	37	78	42.9	17.5	UCX06	TX06	1.8
UCTX06-17	1-1/16																UCX06-17		
UCTX06-18	1-1/8																UCX06-18		
UCTX06-19	1-3/16	5/8	19/32	2-33/64	1-29/64	55/64	2-33/64	0.472	3-1/2	4-1/64	5-5/64	1-3/16	1-29/64	3-5/64	1.6890	0.689	UCX06-19		
UCTX06-20	1-1/4																UCX06-20		
UCTX07	35	19	17	83	49	29	83	16	102	114	144	36	49	88	49.2	19	UCX07	TX07	2.6
UCTX07-21	1-5/16																UCX07-21		
UCTX07-22	1-3/8	3/4	21/32	3-17/64	1-15/16	1-9/64	3-17/64	0.630	4-1/64	4-31/64	5-43/64	1-13/32	1-15/16	3-15/32	1.9370	0.748	UCX07-22		
UCTX07-23	1-7/16																UCX07-23		
UCTX08	40	19	17	83	49	29	83	16	102	117	144	36	49	87	49.2	19	UCX08	TX08	2.6
UCTX08-24	1-1/2																UCX08-24		
UCTX08-25	1-9/16	3/4	21/32	3-17/64	1-15/16	1-9/64	3-17/64	0.630	4-1/64	4-39/64	5-43/64	1-13/32	1-15/16	3-27/64	1.9370	0.748	UCX08-25		
UCTX09	45	19	18	83	49	29	86	16	102	117	151	38	49	92	51.6	19	UCX09	TX09	2.8
UCTX09-26	1-5/8																UCX09-26		
UCTX09-27	1-11/16																UCX09-27		
UCTX09-28	1-3/4	3/4	23/32	3-17/64	1-15/16	1-9/64	3-25/64	0.630	4-1/64	4-39/64	5-15/16	1-1/2	1-15/16	3-5/8	2.0315	0.748	UCX09-28		
UCTX09-29	1-13/16																UCX09-29		
UCTX10	50	25	21	102	64	35	95	22	130	146	171	42	64	106	55.6	22.2	UCX10	TX10	4.3
UCTX10-30	1-7/8																UCX10-30		
UCTX10-31	1-15/16	63/64	13/16	4-1/64	2-1/32	1-3/8	3-3/4	0.866	5-1/8	5-3/4	6-47/64	1-21/32	2-33/64	4-11/64	2.1890	0.874	UCX10-31		
UCTX10-32	2																UCX10-32		
UCTX11	55	32	21	102	64	35	102	22	130	146	194	44	64	119	65.1	25.4	UCX11	TX11	5.2
UCTX11-33	2-1/16																UCX11-33		
UCTX11-34	2-1/8																UCX11-34		
UCTX11-35	2-3/16	1-17/64	13/16	4-1/64	2-1/32	1-3/8	4-1/64	0.866	5-1/8	5-3/4	7-41/64	1-23/32	2-33/64	4-11/16	2.5630	1.000	UCX11-35		
UCTX11-36	2-1/4																UC211-36		
UCTX11-37	2-5/16																UC211-37		
UCTX12	60	32	23	111	70	41	121	26	151	167	224	48	70	137	65.1	25.4	UCX12	TX12	7.6
UCTX12-38	2-3/8																UCX12-38		
UCTX12-39	2-7/16	1-17/64	29/32	4-3/8	2-3/4	1-39/64	4-49/64	1.024	5-15/16	6-37/64	8-13/16	1-57/64	2-3/4	5-25/64	2.5630	1.000	UCX12-39		
UCTX13	65	32	23	111	70	41	121	26	151	167	224	48	70	137	74.6	30.2	UCX13	TX13	7.6
UCTX13-40	2-1/2																UCX13-40		
UCTX13-41	2-9/16	1-17/64	29/32	4-3/8	2-3/4	1-39/64	4-49/64	1.024	5-15/16	6-37/64	8-13/16	1-57/64	2-3/4	5-25/64	2.9370	1.189	UCX13-41		
UCTX14	70	32	23	111	70	41	121	26	151	167	232	48	70	140	77.8	33.3	UCX14	TX14	7.7
UCTX14-42	2-5/8																UCX14-42		
UCTX14-43	2-11/16	1-17/64	29/32	4-3/8	2-3/4	1-39/64	4-49/64	1.024	5-15/16	6-37/64	9-9/64	1-57/64	2-3/4	5-33/64	3.0630	1.311	UCX14-43		
UCTX14-44	2-3/4																UCX14-44		
UCTX15	75	32	23	111	70	41	121	28	165	184	235	48	70	140	82.6	33.3	UCX15	TX15	7.55
UCTX15-45	2-13/16																UCX15-45		
UCTX15-46	2-7/8																UCX15-46		
UCTX15-47	2-15/16	1-17/64	29/32	4-3/8	2-3/4	1-39/64	4-49/64	1.102	6-1/2	7-1/4	9-1/4	1-57/64	2-3/4	5-33/64	3.2520	1.311	UCX15-47		
UCTX15-48	3																UCX15-48		
UCTX16	80	38	30	124	73	48	157	28	173	198	260	54	73	162	85.7	34.1	UCX16	TX16	11
UCTX16-49	3-1/16																UCX16-49		
UCTX16-50	3-1/8																UCX16-50		
UCTX16-51	3-3/16	1-1/2	1-3/16	4-7/8	2-7/8	1-57/64	6-3/16	1.102	6-13/16	7-51/64	10-15/64	2-1/8	2-7/8	6-3/8	3.3740	1.343	UCX16-51		
UCTX16-52	3-1/4																UCX16-52		
UCTX17	85	38	30	124	73	48	157	28	173	198	260	54	73	162	96	39.7	UCX17	TX17	12
UCTX17-53	3-5/16																UCX17-53		
UCTX17-55	3-7/16	1-1/2	1-3/16	4-7/8	2-7/8	1-57/64	6-3/16	1.102	6-13/16	7-51/64	10-15/64	2-1/8	2-7/8	6-3/8	3.7795	1.5630	UCX17-55		

UKTX (Medium-duty)

Take-up Units

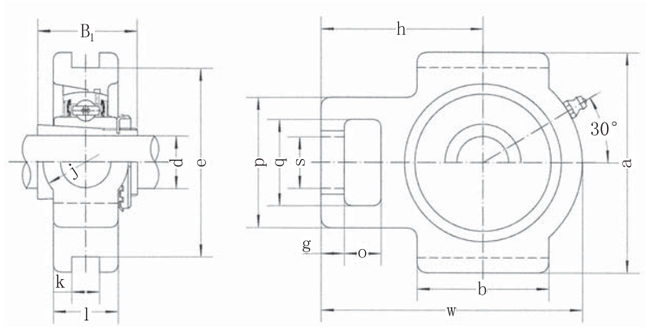

Unit No.	Dimensions mm / in.															Bearing No.	Housing No.	Weight (kg)
	d	o	g	p	q	s	b	k	e	a	w	l	j	h	B1			
UKTX05;H2305	20	16	12	56	37	22	57	12	89	102	113	28	37	70	35	UKX05;H2305	TX05	1.3
UKTX05;HE2305	3/4	5/8	15/32	2-7/32	1-15/32	55/64	2-1/4	0.472	3-1/2	4-1/64	4-29/64	1-3/32	1-29/64	2-3/4	1.378	UKX05;HE2305		
UKTX06;H2306	25	16	15	64	37	22	64	12	89	102	129	30	37	78	38	UKX06;H2306	TX06	1.7
UKTX06;HS2306	7/8	5/8	19/32	2-33/64	1-29/64	55/64	2-33/64	0.472	3-1/2	4-1/64	5-5/64	1-3/16	1-29/64	3-5/64	1.496	UKX06;HS2306		
UKTX06;HE2306	1															UKX06;HE2306		
UKTX07;H2307	30	19	17	83	49	29	83	16	102	114	144	36	49	88	43	UKX07;H2307	TX07	2.6
UKTX07;HS2307	1-1 /8	3/4	21/32	3-17/64	1-15/16	1-9/64	3-17/64	0.630	4-1/64	4-31/64	5-43/64	1-13/32	1-15/16	3-27/64	1.811	UKX07;HS2307		
UKTX08;H2308	35	19	17	83	49	29	83	16	102	117	144	36	49	87	46	UKX08;H2308	TX08	2.6
UKTX08;HE2308	1-1/4	3/4	21/32	3-17/64	1-15/16	1-9/64	3-17/64	0.630	4-1/64	4-39/64	5-43/64	1-13/32	1-15/16	3-27/64	1.811	UKX08;HE2308		
UKTX08;HS2308	1-3/8															UKX08;HS2308		
UKTX09;H2309	40	19	18	83	49	29	86	16	102	117	151	38	49	92	50	UKX09;H2309	TX09	2.9
UKTX09;HA2309	1-7/16															UKX09;HA2309		
UKTX09;HE2309	1-1/2	3/4	23/32	3-17/64	1-15/16	1-9/64	3-25/64	0.630	4-1/64	4-39/64	5-15/16	1-1/2	1-15/16	3-5/8	1.969	UKX09;HE2309		
UKTX09;HS2309	1-5/8															UKX09;HS2309		
UKTX10;H2310	45	25	21	102	64	35	95	22	130	146	171	42	64	106	55	UKX10;H2310	TX10	4.4
UKTX10;HS2310	1-5/8															UKX10;HS2310		
UKTX10;HA2310	1-11/16	63/64	13/16	4-1/64	2-1/32	1-3/8	3-3/4	0.866	5-1/8	5-3/4	6-47/64	1-21/32	2-33/64	4-11/64	2.165	UKX10;HA2310		
UKTX10;HE2310	1-3/4															UKX10;HE2310		
UKTX11;H2311	50	32	21	102	64	35	102	22	130	146	194	44	64	119	59	UKX11;H2311	TX11	5.1
UKTX11;HS2311	1-7/8															UKX11;HS2311		
UKTX11;HA2311	1-15/16	1-17/64	13/16	4-1/64	2-1/32	1-3/8	4-1/64	0.866	5-1/8	5-3/4	7-41/64	1-23/32	2-33/64	4-11/64	2.323	UKX11;HA2311		
UKTX11;HE2311	2															UKX11;HE2311		
UKTX12;H2312	55	32	23	111	70	41	121	26	151	167	224	48	70	137	62	UKX12;H2312	TX12	7.3
UKTX12;HS2312	2-1/8	1-17/64	29/32	4-3/8	2-3/4	1-39/64	4-49/64	1.024	5-15/16	6-37/64	8-13/16	1-7/8	2-3/4	5-25/64	2.441	UKX12;HS2312		
UKTX13;H2313	60	32	23	111	70	41	121	26	151	167	224	48	70	137	65	UKX13;H2313	TX13	7.2
UKTX13;HA2313	2-3/16															UKX13;HA2313		
UKTX13;HE2313	2-1/4	1-17/64	29/32	4-3/8	2-3/4	1-39/64	4-49/64	1.024	5-15/16	6-37/64	8-13/16	1-7/8	2-3/4	5-25/64	2.559	UKX13;HE2313		
UKTX13;HS2313	2-3/8															UKX13;HS2313		
UKTX15;H2315	65	32	23	111	70	41	121	28	165	184	235	48	70	140	73	UKX15;H2315	TX15	8.4
UKTX15;HA2315	2-7/16	1-17/64	29/32	4-3/8	2-3/4	1-39/64	4-49/64	1.102	6-1/2	7-1/4	9-1/4	1-57/64	2-3/4	5-25/64	2.874	UKX15;HA2315		
UKTX15;HE2315	2-3/8															UKX15;HE2315		
UKTX16;H2316	70	38	30	124	73	48	157	28	173	198	260	54	73	162	78	UKX16;H2316	TX16	11.8
UKTX16;HA2316	2-11/16	1-1/2	1-3/16	4-7/8	2-7/8	1-57/64	6-3/16	1.102	6-13/16	7-51/64	10-15/64	2-1/8	2-7/8	6-3/8	3.071	UKX16;HA2316		
UKTX16;HE2316	2-3/4															UKX16;HE2316		
UKTX17;H2317	75	38	30	124	73	48	157	28	173	198	260	54	73	162	82	UKX17;H2317	TX17	11.4
UKTX17;HA2317	2-15/16	1-1/2	1-3/16	4-7/8	2-7/8	1-57/64	6-3/16	1.102	6-13/16	7-51/64	10-15/64	2-1/8	2-7/8	6-3/8	3.228	UKX17;HA2317		
UKTX17;HS2317	3															UKX17;HS2317		

Take-up Units

UCT3 (Heavy-duty)

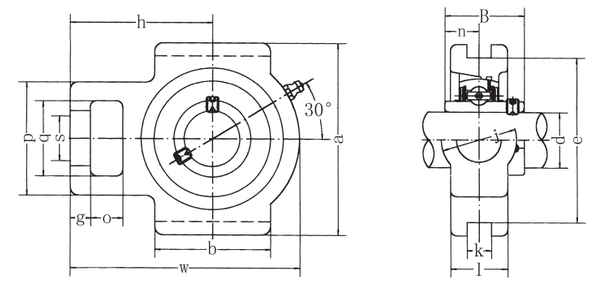

Unit No.	Dimensions mm / in.																Bearing No.	Housing No.	Weight (kg)
	d	o	g	p	q	s	b	k	e	a	w	j	l	h	B	n			
UCT305	25	16	14	62	36	26	65	12	80	89	122	36	26	76	38	15	UC305	T305	1.4
UCT305-13	13/16																UC305-13		
UCT305-14	7/8	5/8	9/16	2-7/16	1-13/32	1-1/32	2-9/16	0.472	3-5/32	3-1/2	4-13/16	1-13/32	1-1/32	3	1.4961	0.591	UC305-14		
UCT305-15	15/16																UC305-15		
UCT305-16	1																UC305-16		
UCT306	30	18	16	70	41	28	74	16	90	100	137	41	28	85	43	17	UC306	T306	1.8
UCT306-17	1-1/16																UC306-17		
UCT306-18	1-1/8	23/32	5/8	2-3/4	1-5/8	1-3/32	2-29/32	0.630	3-55/64	3-15/16	5-13/32	1-5/8	1-3/32	3-11/32	1.6929	0.669	UC306-18		
UCT306-19	1-3/16																UC306-19		
UCT307	35	20	17	75	45	30	80	16	100	111	150	45	32	94	48	19	UC307	T307	2.4
UCT307-20	1-1/4																UC307-20		
UCT307-21	1-5/16	25/32	43/64	2-15/16	1-25/32	1-3/16	2-5/32	0.630	3-15/16	4-3/8	5-29/32	1-25/32	1-1/4	3-11/16	1.8898	0.748	UC307-21		
UCT307-22	1-3/8																UC307-22		
UCT307-23	1-7/16																UC307-23		
UCT308	40	22	19	83	50	32	89	18	112	124	162	50	34	100	52	19	UC308	T308	3.0
UCT308-24	1-1/2	7/8	3/4	3-17/64	1-31/32	1-1/4	3-1/2	0.709	4-13/32	4-7/8	6-3/8	1-21/32	1-11/32	3-15/16	2.0472	0.748	UC308-24		
UCT308-25	1-9/16																UC308-25		
UCT309	45	24	20	90	55	34	97	18	125	138	178	55	38	110	57	22	UC309	T309	4.0
UCT309-26	1-5/8																UC309-26		
UCT309-27	1-11/16	15/16	25/32	3-17/32	2-5/32	1-11/32	3-13/16	0.709	4-59/64	5-7/16	7	2-5/32	1-1/2	4-11/32	2.2441	0.866	UC309-27		
UCT309-28	1-3/4																UC309-28		
UCT310	50	27	22	98	61	37	106	20	140	151	192	61	40	118	61	22	UC310	T310	5.0
UCT310-29	1-13/16																UC310-29		
UCT310-30	1-7/8	1-1/16	7/8	3-27/32	2-13/32	1-15/32	4-3/16	0.787	5-33/64	5-15/16	7-9/16	2-13/32	1-9/16	4-21/32	2.40161	0.866	UC310-30		
UCT310-31	1-15/16																UC310-31		
UCT311	55	29	23	105	66	39	115	22	150	163	207	66	44	127	66	25	UC311	T311	6.4
UCT311-32	2																UC311-32		
UCT311-33	2-1/16	1-15/16	29/32	4-1/8	2-19/32	1-17/32	4-17/32	0.866	5-29/32	6-13/32	8-5/32	2-19/32	1-23/32	5	2.5984	0.984	UC311-33		
UCT311-34	2-1/8																UC311-34		
UCT311-35	2-3/16																UC311-35		
UCT312	60	31	25	113	71	41	123	22	160	178	220	71	46	135	71	26	UC312	T312	7.6
UCT312-36	2-1/4																UC312-36		
UCT312-37	2-5/16	1-7/32	31/32	4-7/16	2-25/32	1-5/8	4-27/32	0.866	6-19/64	7	8-21/32	2-25/32	1-13/16	5-5/16	2.7953	1.024	UC312-37		
UCT312-38	2-3/8																UC312-38		
UCT312-39	2-7/16																UC312-39		
UCT313	65	32	27	116	70	43	134	26	170	190	238	80	50	146	75	30	UC313	T313	9.7
UCT313-40	2-1/2																UC313-40		
UCT313-41	2-9/16	1-17/64	1-1/16	4-9/16	2-3/4	1-11/16	5-9/32	1.024	6-11/16	7-15/32	9-3/8	3-5/32	1-31/32	5-3/4	2.9528	1.181	UC313-41		
UCT314	70	36	27	130	85	46	140	26	180	202	252	90	52	155	78	33	UC314	T314	11
UCT314-42	2-5/8																UC314-42		
UCT314-43	2-11/16	1-13/32	1-1/16	5-1/8	3-11/32	1-13/16	5-1/2	1.024	7-3/32	7-15/16	9-29/32	3-17/32	2-1/16	6-3/32	3.2283	1.299	UC314-43		
UCT314-44	2-3/4																UC314-44		
UCT315	75	36	27	132	85	46	150	26	192	216	262	90	55	160	82	32	UC315	T315	14
UCT315-45	2-13/16																UC315-45		
UCT315-46	2-7/8	1-13/32	1-1/16	5-3/16	3-11/32	1-13/16	5-29/32	1.024	7-9/16	8-1/2	10-5/16	3-17/32	2-5/32	6-5/16	3.2283	1.260	UC315-46		
UCT315-47	2-15/16																UC315-47		
UCT315-48	3																UC315-48		
UCT316	80	42	30	150	98	53	160	30	204	230	282	102	60	174	86	34	UC316	T316	16
UCT316-49	3-1/16																UC316-49		
UCT316-50	3-1/8	1-21/32	1-3/16	5-29/32	3-27/32	2-3/32	6-5/16	1.181	8-1/32	9-1/16	11-3/32	4-1/32	2-3/8	6-27/32	3.2283	1.260	UC316-50		
UCT316-51	3-3/16																UC316-51		
UCT317	85	42	32	152	98	53	170	32	214	240	298	102	64	183	96	40	UC317	T317	20
UCT317-52	3-1/4																UC317-52		
UCT317-53	3-5/16	1-21/32	1-1/4	5-31/32	3-27/32	2-3/32	6-11/16	1.260	8-27/64	9-7/16	11-23/32	4-1/32	2-17/32	7-7/32	3.7795	1.575	UC317-53		
UCT317-55	3-7/16																UC317-55		
UCT318	90	46	32	160	106	57	175	32	228	255	312	110	66	192	96	40	UC318	T318	22
UCT318-55	3-7/16	1-13/16	1-1/4	6-5/16	4-3/16	2-1/4	6-7/8	1.260	8-31/32	10-1/32	12-9/32	4-11/32	2-19/32	7-9/16	3.7795	1.575	UC318-55		
UCT318-56	3-1/2																UC318-56		
UCT319	95	46	33	165	106	57	180	35	240	270	322	110	72	197	103	41	UC319	T319	24
UCT319-58	3-5/8																UC319-58		
UCT319-59	3-11/16	1-13/16	1-5/16	6-1/2	4-3/16	2-1/4	7-3/32	1.378	9-29/64	10-5/8	12-11/16	4-11/32	2-27/32	7-3/4	4.0551	1.614	UC319-59		
UCT319-60	3-3/4																UC319-60		
UCT320	100	48	32	175	115	59	200	35	260	290	345	120	75	210	108	42	UC320	T320	32
UCT320-64	4	1-7/8	1-1/4	6-7/8	4-17/32	2-21/64	7-7/8	1.378	10-15/64	11-13/32	13-19/32	4-23/32	2-15/16	8-9/32	4.2519	1.6535	UC320-64		
UCT322	110	52	38	185	125	65	215	38	285	320	385	130	80	235	117	46	UC322	T322	40
		2-1/16	1-1/2	7-9/32	4-29/32	2-9/16	8-15/32	1.496	11-7/32	12-19/32	15-5/32	5-1/8	3-5/32	9-1/4	4.6063	1.8110			
UCT324	120	60	42	210	140	70	230	45	320	355	432	140	90	267	126	51	UC324	T324	55
		2-3/8	1-21/32	8-9/32	2-3/4	5-1/2	9-1/16	1.772	12-19/32	13-31/32	17	5-1/2	3-17/32	10-1/2	4.9606	2.0079			
UCT326	130	65	45	220	150	75	240	50	350	385	465	150	100	285	135	54	UC326	T326	69
		2-9/16	1-25/32	8-21/32	5-29/32	2-31/32	9-7/16	1.969	13-25/32	15-5/32	18-5/16	5-29/32	3-15/16	11-7/32	5.3150	2.1260			
UCT328	140	70	50	230	160	80	255	50	380	415	515	155	100	315	145	59	UC328	T328	84
		2-3/4	1-31/32	9-1/16	6-5/16	3-5/32	10-1/32	1.969	14-61/64	16-11/32	20-9/32	6-3/32	3-15/16	12-13/32	5.7086	2.3228			

UCC2 (Normal-duty)

Cartridge Units

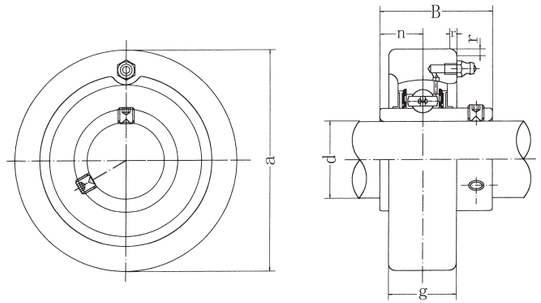

Unit No.	Dimensions mm in. d	a	g	r	B	n	Bearing No.	Housing No.	Weight (kg)
UCC201	12	72	20	2	31	12.7	UC201	C204	0.52
UCC201-8	1/2	2.8346	25/32	0.079	1.2205	0.500	UC201-8		0.51
UCC202	15	72	20	2	31	12.7	UC202	C204	0.51
UCC202-9	9/16	2.8346	25/32	0.079	1.2205	0.500	UC202-9		0.51
UCC202-10	5/8						UC202-10		0.51
UCC203	17	72	20	2	31	12.7	UC203	C204	0.50
UCC203-11	11/16	2.8346	25/32	0.079	1.2205	0.500	UC203-11		0.49
UCC204	20	72	20	2	31	12.7	UC204	C204	0.48
UCC204-12	3/4	2.8346	25/32	0.079	1.2205	0.500	UC204-12		0.48
UCC205	25	80	22	2	34.1	14.3	UC205	C205	0.63
UCC205-13	13/16						UC205-13		0.67
UCC205-14	7/8	3.1496	55/64	0.079	1.3425	0.563	UC205-14		0.66
UCC205-15	15/16						UC205-15		0.64
UCC205-16	1						UC205-16		0.63
UCC206	30	85	27	2	38.1	15.9	UC206	C206	0.80
UCC206-17	1-1/16						UC206-17		0.83
UCC206-18	1-1/8	3.3465	1-1/16	0.079	1.5000	0.626	UC206-18		0.82
UCC206-19	1-3/16						UC206-19		0.80
UCC206-20	1-1/4						UC206-20		0.79
UCC207	35	90	28	2	42.9	17.5	UC207	C207	0.93
UCC207-20	1-1/4						UC207-20		0.99
UCC207-21	1-5/16	3.5433	1-7/64	0.079	1.6890	0.689	UC207-21		0.96
UCC207-22	1-3/8						UC207-22		0.93
UCC207-23	1-7/16						UC207-23		0.90
UCC208	40	100	30	2.5	49.2	19	UC208	C208	1.22
UCC208-24	1-1/2	3.9370	1-3/16	0.098	1.9370	0.748	UC208-24		1.26
UCC208-25	1-9/16						UC208-25		1.23
UCC209	45	110	31	2.5	49.2	19	UC209	C209	1.49
UCC209-26	1-5/8						UC209-26		1.59
UCC209-27	1-11/16	4.3307	1-7/32	0.098	1.9370	0.748	UC209-27		1.55
UCC209-28	1-3/4						UC209-28		1.51
UCC210	50	120	33	2.5	51.6	19	UC210	C210	1.90
UCC210-29	1-13/16						UC210-29		2.02
UCC210-30	1-7/8	4.7244	1-19/64	0.098	2.0315	0.748	UC210-30		1.97
UCC210-31	1-15/16						UC210-31		1.92
UCC210-32	2						UC210-32		1.88
UCC211	55	125	35	2.5	55.6	22.2	UC211	C211	2.18
UCC211-32	2						UC211-32		2.33
UCC211-33	2-1/16	4.9213	1-3/8	0.098	2.1890	0.874	UC211-33		2.27
UCC211-34	2-1/8						UC211-34		2.22
UCC211-35	2-3/16						UC211-35		2.16
UCC212	60	130	38	2.5	65.1	25.4	UC212	C212	2.52
UCC212-36	2-1/4						UC212-36		2.65
UCC212-37	2-5/16	5.1181	1-1/2	0.098	2.5630	1.000	UC212-37		2.57
UCC212-38	2-3/8						UC212-38		2.50
UCC212-39	2-7/16						UC212-39		2.43
UCC213	65	140	40	3	65.1	25.4	UC213	C213	2.98
UCC213-40	2-1/2	5.5118	1-37/64	0.118	2.5630	1.000	UC213-40		3.07
UCC213-41	2-9/16						UC213-41		2.98

Cartridge Units

HCC2 (Normal-duty)

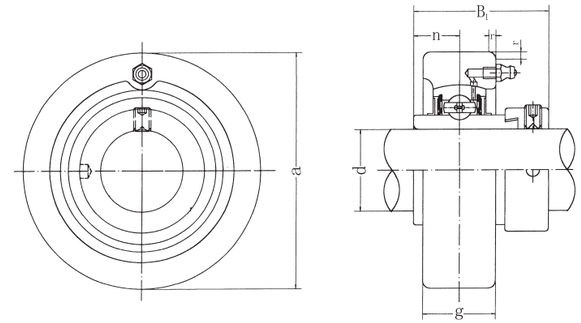

Unit No.	Dimensions mm in. d	a	g	r	B1	n	Bearing No.	Housing No.	Weight (kg)
HCC204	20	72	20	2	43.7	17.1	HC204	C204	0.55
HCC204-12	3/4	2.8346	25/32	0.079	1.720	0.673	HC204-12		0.55
HCC205	25	80	22	2	44.4	17.5	HC205	C205	0.70
HCC205-13	13/16						HC205-13		0.75
HCC205-14	7/8	3.1496	55/64	0.079	1.748	0.689	HC205-14		0.74
HCC205-15	15/16						HC205-15		0.72
HCC205-16	1						HC205-16		0.70
HCC206	30	85	27	2	48.4	18.3	HC206	C206	0.93
HCC206-17	1-1/16						HC206-17		0.98
HCC206-18	1-1/8	3.3465	1-1/16	0.079	1.906	0.720	HC206-18		0.95
HCC206-19	1-3/16						HC206-19		0.93
HCC206-20	1-1/4						HC206-20		0.90
HCC207	35	90	28	2	51.1	18.8	HC207	C207	1.05
HCC207-20	1-1/4						HC207-20		1.12
HCC207-21	1-5/16	3.5433	1-7/64	0.079	2.012	0.740	HC207-21		1.08
HCC207-22	1-3/8						HC207-22		1.05
HCC207-23	1-7/16						HC208-23		1.02
HCC208	40	100	30	2.5	56.3	21.4	HC208	C208	1.37
HCC208-24	1-1/2	3.9370	1-3/16	0.098	2.217	0.843	HC208--24		1.42
HCC208-25	1-9/16						HC208-25		1.38
HCC209	45	110	31	2.5	56.3	21.4	HC209	C209	1.66
HCC209-26	1-5/8						HC209-26		1.77
HCC209-27	1-11/16	4.3307	1-7/32	0.098	2.217	0.843	HC209-27		1.72
HCC209-28	1-3/4						HC209-28		1.68
HCC210	50	120	33	2.5	62.7	24.6	HC210	C210	2.09
HCC210-29	1-13/16						HC210-29		2.24
HCC210-30	1-7/8	4.7244	1-19/64	0.098	2.469	0.969	HC210-30		2.18
HCC210-31	1-15/16						HC210-31		2.12
HCC210-32	2						HC210-32		2.06
HCC211	55	125	35	2.5	71.4	27.8	HC211	C211	2.39
HCC211-32	2						HC211-32		2.59
HCC211-33	2-1/16	4.9213	1-3/8	0.098	2.811	1.094	HC211-33		2.51
HCC211-34	2-1/8						HC211-34		2.44
HCC211-35	2-3/16						HC211-35		2.36
HCC212	60	130	38	2.5	77.8	31	HC212	C212	2.86
HCC212-36	2-1/4						HC212-36		3.02
HCC212-37	2-5/16	5.1181	1-1/2	0.098	3.063	1.220	HC212-37		2.93
HCC212-38	2-3/8						HC212-38		2.88
HCC212-39	2-7/16						HC212-39		2.75

UKC2 (Normal-duty)

Cartridge Units
(with adapter mounted)

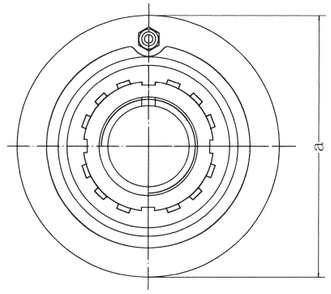

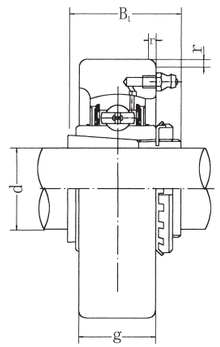

Unit No.	Dimensions mm / in.					Bearing No.	Housing No.	Weight (kg)
	d	a	g	r	B_1			
UKC205;H2305 UKC205;HE2305	20 3/4	80 3.1496	22 55/64	2 0.079	35 1.378	UK205;H2305 UK205;HE2305	C205	0.68
UKC206;H2306 UKC206;HS2306 UKC206;HE2306	25 7/8 1	85 3.3465	27 1-1/16	2 0.079	38 1.496	UK206;H2306 UK206;HS2306 UK206;HE2306	C206	0.84
UKC207;H2307 UKC207;HS2307	30 1-1/8	90 3.5433	28 1-7/64	2 0.079	43 1.693	UK207;H2307 UK207;HS2307	C207	1.02
UKC208;H2308 UKC208;HE2308 UKC208;HS2308	35 1-1/4 1-3/8	100 3.9370	30 1-3/16	2.5 0.098	46 1.811	UK208;H2308 UK208;HE2308 UK208;HS2308	C208	1.32
UKC209;H2309 UKC209;HA2309 UKC209;HE2309 UKC209;HS2309	40 1-7/16 1-1/2 1-5/8	110 4.3307	31 1-7/32	2.5 0.098	50 1.969	UK209;H2309 UK209;HA2309 UK209;HE2309 UK209;HS2309	C209	1.64
UKC210;H2310 UKC210;HS2310 UKC210;HA2310 UKC210;HE2310	45 1-5/8 1-11/16 1-3/4	120 4.7244	33 1-19/64	2.5 0.098	55 2.165	UK210;H2310 UK210;HS2310 UK210;HA2310 UK210;HE2310	C210	2.07
UKC211;H2311 UKC211;HS2311 UKC211;HA2311 UKC211;HE2311	50 1-7/8 1-15/16 2	125 4.9213	35 1-3/8	2.5 0.098	59 2.323	UK211;H2311 UK211;HS2311 UK211;HA2311 UK211;HE2311	C211	2.33
UKC212;H2312 UKC212;HS2312	55 2-1/8	130 5.1181	38 1-1/2	2.5 0.098	62 2.441	UK212;H2312 UK212;HS2312	C212	2.57
UKC213;H2313 UKC213;HA2313 UKC213;HE2313 UKC213;HS2313	60 2-3/16 2-1/4 2-3/8	140 5.5118	40 1-37/64	3 0.118	65 2.559	UK213;H2313 UK213;HA2313 UK213;HE2313 UK213;HS2313	C213	2.89

Cartridge Units

UCCX (Medium-duty)

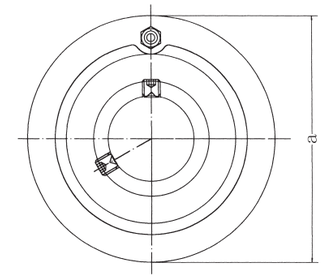

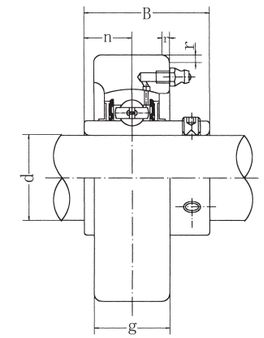

Unit No.	Dimensions mm / in.						Bearing No.	Housing No.	Weight (kg)
	d	a	g	r	B	n			
UCCX05 UCCX05-13 UCCX05-14 UCCX05-15 UCCX05-16	25 13/16 7/8 15/16 1	90 3.5433	27 1-1/16	2 0.079	38.1 1.5000	15.9 0.626	UCX05 UCX05-13 UCX05-14 UCX05-15 UCX05-16	CX05	1.1
UCCX06 UCCX06-17 UCCX06-18 UCCX06-19 UCCX06-20	30 1-1/16 1-1/8 1-3/16 1-1/4	100 3.9370	30 1-3/16	2.5 0.098	42.9 1.6890	17.5 0.689	UCX06 UCX06-17 UCX06-18 UCX06-19 UCX06-20	CX06	1.6
UCCX07 UCCX07-21 UCCX07-22 UCCX07-23	35 1-5/16 1-3/8 1-7/16	110 4.3307	34 1-11/32	2.5 0.098	49.2 1.9370	19 0.748	UCX07 UCX07-21 UCX07-22 UCX07-23	CX07	2.0
UCCX08 UCCX08-24 UCCX08-25	40 1-1/2 1-9/16	120 4.7244	38 1-1/2	2.5 0.098	49.2 1.9370	19 0.748	UCX08 UCX08-24 UCX08-25	CX08	2.5
UCCX09 UCCX09-26 UCCX09-27 UCCX09-28 UCCX09-29	45 1-5/8 1-11/16 1-3/4 1-13/16	120 4.7244	38 1-1/2	2.5 0.098	51.6 2.0315	19 0.748	UCX09 UCX09-26 UCX09-27 UCX09-28 UCX09-29	CX09	2.4
UCCX10 UCCX10-30 UCCX10-31 UCCX10-32	50 1-7/8 1-15/16 2	130 5.1181	40 1-37/64	2.5 0.098	55.6 2.1890	22.2 0.874	UCX10 UCX10-30 UCX10-31 UCX10-32	CX10	3.0
UCCX11 UCCX11-33 UCCX11-34 UCCX11-35 UCCX11-36 UCCX11-37	55 2-1/16 2-1/8 2-3/16 2-1/4 2-5/16	150 5.9055	42 1-21/32	3 0.118	65.1 2.5630	25.4 1.000	UCX11 UCX11-33 UCX11-34 UCX11-35 UCX11-36 UCX11-37	CX11	4.4
UCCX12 UCCX12-38 UCCX12-39	60 2-3/8 2-7/16	160 6.2992	44 1-47/64	3 0.118	65.1 2.5630	25.4 1.000	UCX12 UCX12-38 UCX12-39	CX12	5.0

UKCX (Medium-duty)

Cartridge Units

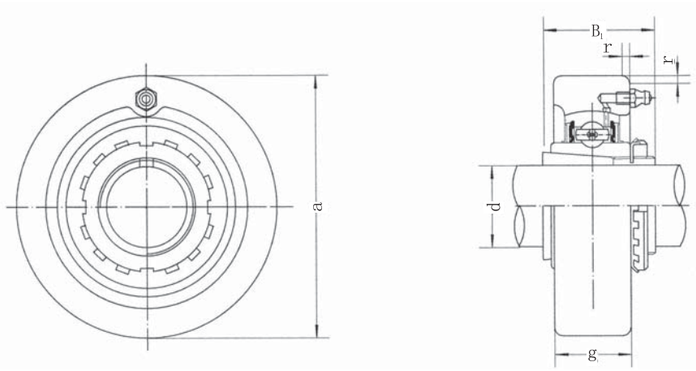

Unit No.	Dimensions mm / in.					Bearing No.	Housing No.	Weight (kg)
	d	a	g	r	B1			
UKCX05;H2305 UKCX05;HE2305	20 3/4	90 3.5433	27 1-1/16	2 0.079	35 1.378	UKX05;H2305 UKX05;HE2305	CX05	0.99
UKCX06;H2306 UKCX06;HS2306 UKCX06;HE2306	25 7/8 1	100 3.9370	30 1-3/16	2.5 0.098	38 1.496	UKX06;H2306 UKX06;HS2306 UKX06;HE2306	CX06	1.3
UKCX07;H2307 UKCX07;HS2307	30 1-1/8	110 4.3307	34 1-11/32	2.5 0.098	43 1.693	UKX07;H2307 UKX07;HS2307	CX07	1.7
UKCX08;H2308 UKCX08;HE2308 UKCX08;HS2308	35 1-1/4 1-3/8	120 4.7244	38 1-1/2	2.5 0.098	46 1.811	UKX08;H2308 UKX08;HE2308 UKX08;HS2308	CX08	2.3
UKCX09;H2309 UKCX09;HA2309 UKCX09;HE2309 UKCX09;HS2309	40 1-7/16 1-1/2 1-5/8	120 4.7244	38 1-1/2	2.5 0.098	50 1.969	UKX09;H2309 UKX09;HA2309 UKX09;HE2309 UKX09;HS2309	CX09	2.3
UKCX10;H2310 UKCX10;HS2310 UKCX10;HA2310 UKCX10;HE2310	45 1-5/8 1-11/16 1-3/4	130 5.1181	40 1-37/64	2.5 0.098	55 2.165	UKX10;H2310 UKX10;HS2310 UKX10;HA2310 UKX10;HE2310	CX10	2.8
UKCX11;H2311 UKCX11;HS2311 UKCX11;HA2311 UKCX11;HE2311	50 1-7/8 1-15/16 2	150 5.9055	42 1-21/32	3 0.118	59 2.323	UKX11;H2311 UKX11;HS2311 UKX11;HA2311 UKX11;HE2311	CX11	3.8
UKCX12;H2312 UKCX12;HS2312	55 2-1/8	160 6.2992	44 1-23/32	3 0.118	62 2.441	UKX12;H2312 UKX12;HS2312	CX12	4.4

Cartridge Units

UCC3 (Heavy-duty)

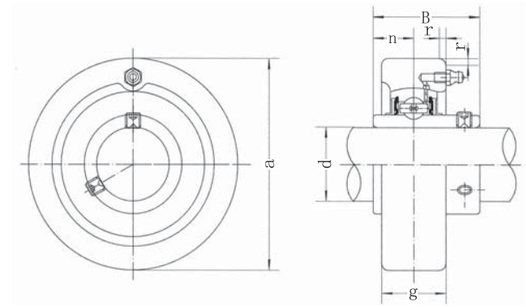

Unit No.	Dimensions mm / in.						Bearing No.	Housing No.	Weight (kg)
	d	a	g	r	B	n			
UCC305	25	90	26	2.5	38	15	UC305	C305	1.10
UCC305-13	13/16	3.5433	1-1/32	0.098	1.4961	0.591	UC305-13		1.15
UCC305-14	7/8						UC305-14		1.13
UCC305-15	15/16						UC305-15		1.11
UCC305-16	1						UC305-16		1.10
UCC306	30	100	28	2.5	43	17	UC306	C306	1.40
UCC306-17	1-1/16	3.9370	1-7/64	0.098	1.6929	0.669	UC306-17		1.45
UCC306-18	1-1/8						UC306-18		1.42
UCC306-19	1-3/16						UC306-19		1.40
UCC307	35	110	32	3	48	19	UC307	C307	1.80
UCC307-20	1-1/4	1.3307	1-1/64	0.118	1.8897	0.748	UC307-20		1.86
UCC307-21	1-5/16						UC307-21		1.83
UCC307-22	1-3/8						UC307-22		1.80
UCC307-23	1-7/16						UC307-23		1.78
UCC308	40	120	34	3	52	19	UC308	C308	2.20
UCC308-24	1-1/2	4.7244	1-11/32	0.118	2.0472	0.748	UC308-24		2.25
UCC308-25	1-9/16						UC308-25		2.21
UCC309	45	130	38	3.5	57	22	UC309	C309	2.70
UCC309-26	1-5/8	2.1181	1-1/2	0.138	2.441	0.866	UC309-26		2.81
UCC309-27	1-11/16						UC309-27		2.77
UCC309-28	1-3/4						UC309-28		2.72
UCC310	50	140	40	3.5	61	22	UC310	C310	3.30
UCC310-29	1-13/16	5.118	1-37/64	0.138	2.4015	0.866	UC310-29		3.62
UCC310-30	1-7/8						UC310-30		3.39
UCC310-31	1-15/16						UC310-31		3.33
UCC311	55	150	44	3.5	66	25	UC311	C311	3.90
UCC311-32	2	5.9055	1-47/64	0.138	2.5984	0.984	UC311-32		1.08
UCC311-33	2-1/16						UC311-33		4.01
UCC311-34	2-1/8						UC311-34		3.95
UCC311-35	2-3/16						UC311-35		3.87
UCC312	60	160	46	3.5	71	26	UC312	C312	4.80
UCC312-36	2-1/4	6.2992	1-13/16	0.138	2.7953	1.024	UC312-36		4.95
UCC312-37	2-5/16						UC312-37		4.87
UCC312-38	2-3/8						UC312-38		4.78
UCC312-39	2-7/16						UC312-39		4.70
UCC313	65	170	50	3.5	75	30	UC313	C313	5.80
UCC313-40	2-1/2	6.6929	1-31/32	0.138	2.9528	1.181	UC313-40		5.89
UCC313-41	2-9/16						UC313-41		5.89
UCC314	70	180	52	4	78	33	UC314	C314	6.60
UCC314-42	2-5/8	7.0866	2-3/64	0.157	3.0709	1.299	UC314-42		6.82
UCC314-43	2-11/16						UC314-43		6.71
UCC314-44	2-3/4						UC314-44		6.61
UCC315	75	190	55	4	82	32	UC315	C315	7.80
UCC315-45	2-13/16	7.4803	2-11/64	0.157	3.2288	1.260	UC315-45		8.07
UCC315-46	2-7/8						UC315-46		7.93
UCC315-47	2-15/16						UC315-47		7.84
UCC315-48	3						UC315-48		7.71
UCC316	80	200	60	4	86	34	UC316	C316	9.05
UCC316-49	3-1/16	7.8740	2-23/64	0.157	3.3858	1.339	UC316-49		9.22
UCC316-50	3-1/8						UC316-50		9.08
UCC316-51	3-3/16						UC316-51		8.99
UCC317	85	215	64	4	96	40	UC317	C317	10.97
UCC317-52	3-1/4	8.4646	2-33/64	0.157	3.7795	1.575	UC317-52		11.19
UCC317-53	3-5/16						UC317-53		11.06
UCC317-55	3-7/16						UC317-55		10.74
UCC318	90	225	66	4	96	40	UC318	C318	11.96
UCC318-55	3-7/16	8.8583	2-19/32	0.157	3.7795	1.575	UC318-55		12.25
UCC318-56	3-1/2						UC318-56		12.07
UCC319	95	240	72	4	103	41	UC319	C319	15.00
UCC319-58	3-5/8	9.4488	2-53/64	0.157	4.0551	1.614	UC319-58		15.33
UCC319-59	3-11/16						UC319-59		15.15
UCC319-60	3-3/4						UC319-60		14.96
UCC320	100	260	75	4	108	42	UC320	C320	19.6
UCC320-64	4	10.2362	2-61/64	0.157	4.2519	1.645	UC320-64		19.4
UCC322	110	300 11.8110	80 3-5/32	5 0.197	117 4.6063	46 1.811	UC322	C322	29.2
UCC324	120	320 2.5984	90 3-35/64	5 0.197	126 4.9606	51 2.008	UC324	C324	35.9
UCC326	130	340 13.3858	100 3-15/16	5 0.197	135 5.3150	54 2.126	UC326	C326	43.0
UCC328	140	360 14.1732	100 3-15/16	5 0.197	145 5.7086	59 3.323	UC328	C328	52.9

UCPH2(Normal-duty)

Pillow Blocks
with setscrews

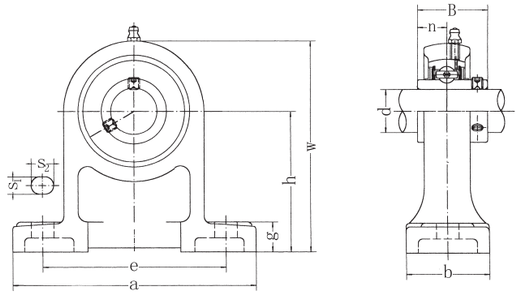

Unit No.	Dimensions mm / in.											Bolt Size mm / inch	Bearing No.	Housing No.	Weigh (kg)
	d	h	a	e	b	s_1	s_2	g	w	B	n				
UCPH201	12	70	127	95	40	13	19	15	101	31	12.7	M10	UC201	PH204	0.81
UCPH201-8	1/2												UC201-8		0.80
UCPH202	15	2-3/4	5	3-3/4	1-9/16	1/2	3/4	19/32	3-63/64	1.2205	0.500	3/8	UC202		0.80
UCPH202-9	9/16												UC202-9		0.80
UCPH202-10	5/8												UC202-10		0.80
UCPH203	17												UC203		0.79
UCPH203-11	11/16												UC203-11		0.78
UCPH204	20												UC204		0.77
UCPH204-12	3/4												UC204-12		0.77
UCPH205	25	80	140	105	50	13	19	16	114	34.1	14.3	M10	UC205	PH205	1.01
UCPH205-13	13/16	3-5/32	5-1/2	4-1/8	1-31/32	1/2	3/4	5/8	4-31/64	1.3425	0.563	3/8	UC205-13		1.05
UCPH205-14	7/8												UC205-14		1.04
UCPH205-15	15/16												UC205-15		1.02
UCPH205-16	1												UC205-16		1.01
UCPH206	30	90	161	121	50	17	21	17	130	38.1	15.9	M14	UC206	PH206	1.47
UCPH206-17	1-1/16	3-35/64	6-11/32	4-3/4	1-31/32	43/64	53/64	43/64	5-1/8	1.5000	0.626	1/2	UC206-17		1.50
UCPH206-18	1-1/8												UC206-18		1.49
UCPH206-19	1-3/16												UC206-19		1.47
UCPH206-20	1-1/4												UC206-20		1.46
UCPH207	35	95	166	127	60	17	21	18	140	42.9	17.5	M14	UC207	PH207	1.91
UCPH207-20	1-1/4	3-47/64	6-17/32	5	2-23/64	43/64	53/64	45/64	5-33/64	1.6890	0.689	1/2	UC207-20		1.97
UCPH207-21	1-5/16												UC207-21		1.94
UCPH207-22	1-3/8												UC207-22		1.91
UCPH207-23	1-7/16												UC207-23		1.88
UCPH208	40	100	178	137	70	17	21	19	150	49.2	19	M14	UC208	PH208	2.52
UCPH208-24	1-1/2	3-15/16	7-1/64	5-13/32	2-3/4	43/64	53/64	3/4	5-29/32	1.9370	0.748	1/2	UC208-24		2.56
UCPH208-25	1-9/16												UC208-25		2.53
UCPH209	45	105	189	146	70	17	21	20	158	49.2	19	M14	UC209	PH209	2.72
UCPH209-26	1-5/8	4-9/64	7-7/16	5-3/4	2-3/4	43/64	53/64	25/32	6-7/32	1.9370	0.748	1/2	UC209-26		2.82
UCPH209-27	1-11/16												UC209-27		2.78
UCPH209-28	1-3/4												UC209-28		2.74
UCPH210	50	110	205	159	70	20	23	21	165	51.6	19	M16	UC210	PH210	3.10
UCPH210-29	1-13/16	4-21/64	8-5/64	6-1/4	2-3/4	25/32	29/32	53/64	6-1/2	2.0315	0.748	5/8	UC210-29		3.22
UCPH210-30	1-7/8												UC210-30		3.17
UCPH210-31	1-15/16												UC210-31		3.12
UCPH210-32	2												UC210-32		3.08
UCPH211	55	120	219	171	75	20	23	22	181	55.6	22.2	M16	UC211	PH211	5.51
UCPH211-32	2	4-23/32	8-5/8	6-47/64	2-61/64	25/32	29/32	55/64	7-1/8	2.1890	0.874	5/8	UC211-32		5.66
UCPH211-33	2-1/16												UC211-33		5.6
UCPH211-34	2-1/8												UC211-34		5.55
UCPH211-35	2-3/16												UC211-35		5.49
UCPH212	60	130	241	184	85	20	23	25	197	65.1	25.4	M16	UC212	PH212	6.34
UCPH212-36	2-1/4	5-1/8	9-1/2	7-1/4	3-11/32	25/32	29/32	63/64	7-3/4	2.5630	1.000	5/8	UC212-36		6.47
UCPH212-37	2-5/16												UC212-37		6.39
UCPH212-38	2-3/8												UC212-38		6.32
UCPH212-39	2-7/16												UC212-39		6.25
UCPH213	65	140	265	203	95	25	28	27	212	65.1	25.4	M20	UC213	PH213	7.45
UCPH213-40	2-1/2	5-33/64	10-7/16	8	3-3/4	63/64	1-3/32	1-1/16	8-11/32	2.5630	1.000	3/4	UC213-40		7.54
UCPH213-41	2-9/16												UC213-41		7.45
UCPH214	70	150	266	210	105	25	28	28	225	74.6	30.2	M20	UC214	PH214	8.25
UCPH214-42	2-5/8	5-29/32	10-15/32	8-17/64	5-9/64	63/64	1-3/32	1-7/64	8-55/64	2.9370	1.189	3/4	UC214-42		8.46
UCPH214-43	2-11/16												UC214-43		8.36
UCPH214-44	2-3/4												UC214-44		8.26
UCPH215	75	160	275	217	115	25	28	29	238	77.8	33.3	M20	UC215	PH215	9.61
UCPH215-45	2-13/16	5-19/64	10-53/64	8-35/64	4-17/32	63/64	1-3/32	1-9/64	9-3/8	3.0630	1.311	3/4	UC215-45		9.85
UCPH215-46	2-7/8												UC215-46		9.75
UCPH215-47	2-15/16												UC215-47		9.64
UCPH215-48	3												UC215-48		9.25
UCPH216	80	170	292	232	125	25	28	30	253	82.6	33.3	M20	UC216	PH216	10.8
UCPH216-49	3-1/16	6-11/16	11-1/2	9-1/8	4-59/64	63/64	1-3/32	1-3/16	9-61/64	3.2520	1.311	3/4	UC216-49		10.98
UCPH216-50	3-1/8												UC216-50		10.85
UCPH216-51	3-3/16												UC216-51		10.72

Pillow Blocks

UCPA2(Normal-duty)

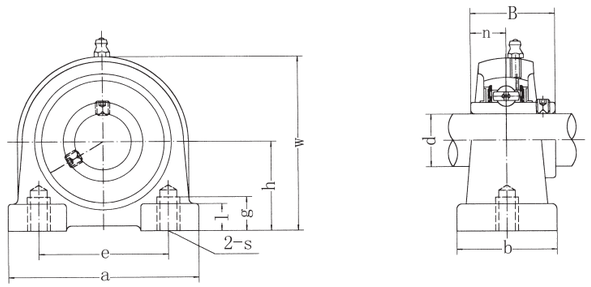

Unit No.	Dimensions mm / in.											Bolt Size mm / inch	Bearing No.	Housing No.	Weight (kg)
	d	h	a	e	b	S	g	l	w	B	n				
UCPA201	12	30.2	76	52	40	M10	15	11	62	31	12.7	M10	UC201	PA204	0.6
UCPA201-8	1/2	1-3/16	3	2-3/64	1-9/16		19/32	7/16	2-7/16	1.2205	0.500		UC201-8		0.59
UCPA202	15												UC202		0.59
UCPA202-9	9/16												UC202-9		0.59
UCPA202-10	5/8												UC202-10		0.59
UCPA203	17												UC203		0.58
UCPA203-11	11/16												UC203-11		0.57
UCPA204	20												UC204		0.56
UCPA204-12	3/4												UC204-12		0.56
UCPA205	25	36.5	84	56	38	M10	15	12	72	34.1	14.3	M10	UC205	PA205	0.83
UCPA205-13	13/16	1-7/16	3-5/16	2-13/64	1-1/2		19/32	15/32	2-53/64	1.3425	0.563		UC205-13		0.87
UCPA205-14	7/8												UC205-14		0.86
UCPA205-15	15/16												UC205-15		0.84
UCPA205-16	1												UC205-16		0.83
UCPA206	30	42.9	94	66	50	M14	18	12	84	38.1	15.9	M14	UC206	PA206	1.12
UCPA206-17	1-1/16	1-11/16	3-45/64	2-19/32	1-31/32		45/64	15/32	3-5/16	1.5000	0.626		UC206-17		1.15
UCPA206-18	1-1/8												UC206-18		1.14
UCPA206-19	1-3/16												UC206-19		1.12
UCPA206-20	1-1/4												UC206-20		1.11
UCPA207	35	47.6	110	80	55	M14	20	13	95	42.9	17.5	M14	UC207	PA207	1.48
UCPA207-20	1-1/4	1-7/8	4-21/64	3-5/32	2-11/64		25/32	33/64	3-47/64	1.6890	0.689		UC207-20		1.54
UCPA207-21	1-5/16												UC207-21		1.51
UCPA207-22	1-3/8												UC207-22		1.48
UCPA207-23	1-7/16												UC207-23		1.45
UCPA208	40	49.2	116	84	58	M14	20	13	100	49.2	19	M14	UC208	PA208	1.89
UCPA208-24	1-1/2	1-15/16	4-9/16	3-5/16	2-9/32		25/32	33/64	3-15/16	1.9370	0.748		UC208-24		1.93
UCPA208-25	1-9/16												UC208-25		1.90
UCPA209	45	54.2	120	90	60	M14	25	13	108	49.2	19	M14	UC209	PA209	1.98
UCPA209-26	1-5/8	2-9/64	4-23/32	3-35/64	2-23/64		63/64	33/64	4-1/4	1.9370	0.748		UC209-26		2.08
UCPA209-27	1-11/16												UC209-27		2.04
UCPA209-28	1-3/4												UC209-28		2.00
UCPA210	50	57.2	130	94	64	M16	25	14	116	51.6	19	M16	UC210	PA210	2.16
UCPA210-29	1-13/16	2-1/4	5-1/8	3-45/64	2-33/64		63/64	35/64	4-9/16	2.0315	0.748		UC210-29		2.28
UCPA210-30	1-7/8												UC210-30		2.23
UCPA210-31	1-15/16												UC210-31		2.18
UCPA210-32	2												UC210-32		2.14
UCPA211	55	63.5	140	104	66	M16	25	14	125	55.6	22.2	M16	UC211	PA211	3.26
UCPA211-32	2	2-1/2	5-33/64	4-3/32	2-19/32		63/64	35/64	4-59/64	2.1890	0.874		UC211-32		3.41
UCPA211-33	2-1/16												UC211-33		3.35
UCPA211-34	2-1/8												UC211-34		3.30
UCPA211-35	2-3/16												UC211-35		3.24
UCPA212	60	69.9	150	114	68	M16	25	15	138	65.1	25.4	M16	UC212	PA212	4.19
UCPA212-36	2-1/4	2-3/4	5-29/32	4-31/64	2-43/64		63/64	19/32	5-7/16	2.5630	1.000		UC212-36		4.32
UCPA212-37	2-5/16												UC212-37		4.24
UCPA212-38	2-3/8												UC212-38		4.17
UCPA212-39	2-7/16												UC212-39		4.10
UCPA213	65	76.2	160	124	70	M16	25	15	150	65.1	25.4	M16	UC213	PA213	5.08
UCPA213-40	2-1/2	3	6-19/64	4-7/8	2-3/4		63/64	19/32	5-29/32	2.5630	1.000		UC213-40		5.17
UCPA213-41	2-9/16												UC213-41		5.08

UCPG2 (Normal-duty)

Pillow Blocks

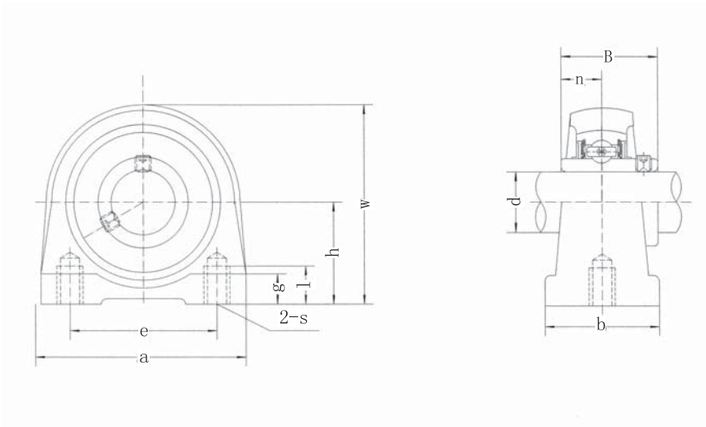

Unit No.	Dimensions mm in. d	h	a	e	b	s	l	g	w	B	n	Bolt Size mm inch	Bearing No.	Housing No.	Weight (kg)
UCPG201	12	33.3	70	49	38		14	14	64	31	12.7		UC201		0..63
UCPG201-8	1/2												UC201-8		0.62
UCPG202	15					M8						M8	UC202		0.62
UCPG202-9	9/16												UC202-9		0.62
UCPG202-10	5/8	1-5/16	2-3/4	1-59/64	1-1/2		35/64	35/64	2-23/64	1.2205	0.500		UC202-10	PG204	0.62
UCPG203	17												UC203		0.61
UCPG203-11	11/16												UC203-11		0.60
UCPG204	20												UC204		0.59
UCPG204-12	3/4												UC204-12		0.59
UCPG205	25	36.5	75	50	38		15	15	70	34.1	14.3		UC205		0.70
UCPG205-13	13/16												UC205-13		0.74
UCPG205-14	7/8												UC205-14	PG205	0.73
UCPG205-15	15/16	1-7/16	2-61/64	1-31/32	1-1/2	M10	19/32	19/32	2-3/4	1.3425	0.563	M10	UC205-15		0.71
UCPG205-16	1												UC205-16		0.70
UCPG206	30	42.9	85	60	48		17	16	83	38.1	15.9		UC206		1.09
UCPG206-17	1-1/16												UC206-17		1.10
UCPG206-18	1-1/8	1-11/16	3-11/32	2-23/64	1-57/64	M10	43/64	5/8	3-17/64	1.5000	0.626	M10	UC206-18	PG206	1.11
UCPG206-19	1-3/16												UC206-19		1.09
UCPG206-20	1-1/4												UC206-20		1.08
UCPG207	35	47.6	100	68	48		20	19	93	42.9	17.5		UC207		1.47
UCPG207-20	1-1/4												UC207-20		1.53
UCPG207-21	1-5/16	1-7/8	3-15/16	2-43/64	1-57/64	M12	25/32	3/4	3-21/32	1.6890	0.689	M12	UC207-21	PG207	1.50
UCPG207-22	1-3/8												UC207-22		1.47
UCPG207-23	1-7/16												UC207-23		1.44
UCPG208	40	49.2	110	78	54		20	19	98	49.2	19		UC208		1.81
UCPG208-24	1-1/2	1-15/16	4-21/64	3-5/64	2-1/8	M12	25/32	3/4	3-55/64	1.9370	0.748	M12	UC208-24	PG208	1.85
UCPG208-25	1-9/16												UC208-25		1.82
UCPG209	45	53.9	120	85	54		20	19	106	49.2	19		UC209		2.13
UCPG209-26	1-5/8												UC209-26	PG209	2.23
UCPG209-27	1-11/16	2-1/8	4-23/32	3-11/32	2-1/8	M12	25/32	3/4	4-11/64	1.9370	0.748	M12	UC209-27		2.19
UCPG209-28	1-3/4												UC209-28		2.15
UCPG210	50	57.2	135	95	60		21	22	114	51.6	19		UC210		2.84
UCPG210-29	1-13/16												UC210-29		2.96
UCPG210-30	1-7/8	2-1/4	5-5/16	3-47/64	2-23/64	M16	53/64	55/64	4-31/64	2.0315	0.748	M16	UC210-30	PG210	2.91
UCPG210-31	1-15/16												UC210-31		2.86
UCPG210-32	2												UC210-32		2.82

Pillow Blocks

UCPW2 (Normal-duty)

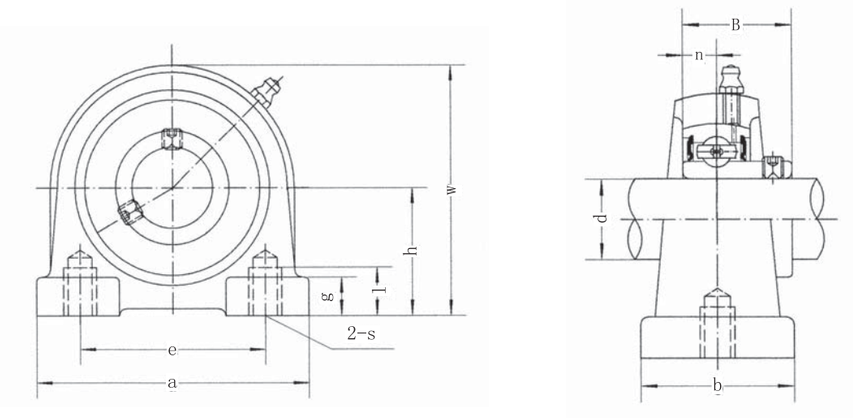

Unit No.	Dimensions mm in. d	h	a	e	b	s	g	l	w	B	n	Bolt Size mm inch	Bearing No.	Housing No.	Weight (kg)
UCSPW201	12	30.2	63	47	30		10	11	57	27.4	11.5		UCS201		0.41
UCSPW201-8	1/2												UCS201-8		0.40
UCSPW202	15					M8						M8	UCS202		0.40
UCSPW202-9	9/16												UCS202-9		0.40
UCSPW202-10	5/8	1-3/16	2-31/64	1-27/32	1-3/16		25/64	7/16	2-1/4	1.0787	0.4528		UCS202-10	PW203	0.40
UCSPW203	17												UCS203		0.39
UCSPW203-11	11/16												UCS203-11		0.39
UCPW204	20	33.3	65	50.8	32	M8	15	14.5	64	31	12.7	M8	UC204	PW204	0.46
UCPW204-12	3/4	1-5/16	2-9/16	2	1-17/64		19/32	37/64	2-33/64	1.2205	0.500		UC204-12		
UCPW205	25	36.5	70	50.8	36		15	13	70	34.1	14.3		UC205		0.67
UCPW205-13	13/16												UC205-13		0.71
UCPW205-14	7/8												UC205-14	PW205	0.70
UCPW205-15	15/16	1-7/16	2-3/4	2	1-27/64	M10	19/32	33/64	2-3/4	1.3425	0.563	M10	UC205-15		0.68
UCPW205-16	1												UC205-16		0.67
UCPW206	30	42.9	98	76.2	40		18	16	82	38.1	15.9		UC206		1.12
UCPW206-17	1-1/16												UC206-17		1.15
UCPW206-18	1-1/8	1-11/16	3-55/64	3	1-37/64	M10	45/64	5/8	3-15/64	1.5000	0.626	M10	UC206-18	PW206	1.14
UCPW206-19	1-3/16												UC206-19		1.12
UCPW206-20	1-1/4												UC206-20		1.11
UCPW207	35	47.6	103	82.6	45		20	19	93	42.9	17.5		UC207		1.38
UCPW207-20	1-1/4												UC207-20		1.44
UCPW207-21	1-5/16	1-7/8	4-1/16	3-1/4	1-49/64	M10	25/32	3/4	3-21/32	1.6890	0.689	M10	UC207-21	PW207	1.41
UCPW207-22	1-3/8												UC207-22		1.38
UCPW207-23	1-7/16												UC207-23		1.35
UCPW208	40	49.2	116	88.9	48		20	19	99	49.2	19		UC208		1.86
UCPW208-24	1-1/2	1-15/16	4-9/16	3-1/2	1-57/64	M12	25/32	3/4	3-57/64	1.9370	0.748	M12	UC208-24	PW208	1.90
UCPW208-25	1-9/16												UC208-25		1.87
UCPW209	45	53.9	120	95.3	48		25	19	107	49.2	19		UC209		1.92
UCPW209-26	1-5/8												UC209-26	PW209	2.02
UCPW209-27	1-11/16	2-1/8	4-23/32	3-3/4	1-57/64	M12	63/64	3/4	4-7/32	1.9370	0.748	M12	UC209-27		1.98
UCPW209-28	1-3/4												UC209-28		1.94
UCPW210	50	57.2	135	101.6	54		25	22	115	51.6	19		UC210		2.24
UCPW210-29	1-13/16												UC210-29		2.36
UCPW210-30	1-7/8	2-1/4	5-5/16	4	2-1/8	M16	63/64	55/64	4-17/32	2.0315	0.748	M16	UC210-30	PW210	2.31
UCPW210-31	1-15/16												UC210-31		2.26
UCPW210-32	2												UC210-32		2.22

UCTB2 (Normal-duty)

Pillow Blocks

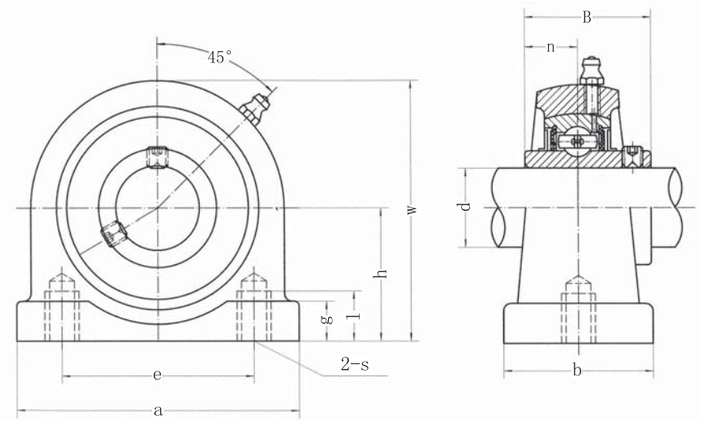

Unit No.	Dimensions mm / in.											Bolt Size mm / inch	Bearing No.	Housing No.	Weight (kg)
	d	h	a	e	b	s	g	l	w	B	n				
UCTB204	20	33.3	65	50.8	32	3/8-16	15	14.5	64	31	12.7	3/8-16	UC204	TB204	0.46
UCTB204-12	3/4	1-5/16	2-9/16	2	1-17/64	UNF	19/32	37/64	2-33/64	1.2205	0.500	UNF	UC204-12		
UCTB205	25	36.5	70	50.8	36	3/8-16 UNF	15	13	70	34.1	14.3	3/8-16 UNF	UC205	TB205	0.67
UCTB205-13	13/16	1-7/16	2-3/4	2	1-27/64		19/32	33/64	2-3/4	1.3425	0.563		UC205-13		0.71
UCTB205-14	7/8												UC205-14		0.70
UCTB205-15	15/16												UC205-15		0.68
UCTB205-16	1												UC205-16		0.67
UCTB206	30	42.9	98	76.2	40	7/16-14 UNF	18	16	82	38.1	15.9	7/16-14 UNF	UC206	TB206	1.12
UCTB206-17	1-1/16	1-11/16	3-55/64	3	1-37/64		45/64	5/8	3-15/64	1.5000	0.626		UC206-17		1.15
UCTB206-18	1-1/8												UC206-18		1.14
UCTB206-19	1-3/16												UC206-19		1.12
UCTB206-20	1-1/4												UC206-20		1.11
UCTB207	35	47.6	103	82.6	45	1/2-13 UNF	20	19	93	42.9	17.5	1/2-13 UNF	UC207	TB207	1.38
UCTB207-20	1-1/4	1-7/8	4-1/16	3-1/4	1-49/64		25/32	3/4	3-21/32	1.6890	0.689		UCS207-20		1.44
UCTB207-21	1-5/16												UC207-21		1.41
UCTB207-22	1-3/8												UC207-22		1.38
UCTB207-23	1-7/16												UC207-23		1.35
UCTB208	40	49.2	116	88.9	48	1/2-13 UNF	20	19	99	49.2	19	1/2-13 UNF	UC208	TB208	1.86
UCTB208-24	1-1/2	1-15/16	4-9/16	3-1/2	1-57/64		25/32	3/4	3-57/64	1.9370	0.748		UC208-24		1.90
UCTB208-25	1-9/16												UC208-25		1.87
UCTB209	45	53.9	120	95.3	48	1/2-13 UNF	25	19	107	49.2	19	1/2-13 UNF	UC209	TB209	1.92
UCTB209-26	1-5/8	2-1/8	4-23/32	3-3/4	1-57/64		63/64	3/4	4-7/32	1.9370	0.748		UC209-26		2.02
UCTB209-27	1-11/16												UC209-27		1.98
UCTB209-28	1-3/4												UC209-28		1.94
UCTB210	50	57.2	135	101.6	54	5/8-11 UNF	25	22	115	51.6	19	5/8-11 UNF	UC210	TB210	2.24
UCTB210-29	1-13/16	2-1/4	5-5/16	4	2-1/8		63/64	55/64	4-17/32	2.0315	0.748		UC210-29		2.36
UCTB210-30	1-7/8												UC210-30		2.31
UCTB210-31	1-15/16												UC210-31		2.26
UCTB210-32	2												UC210-32		2.22

Pillow Blocks

UCSHE2(Normal-duty)

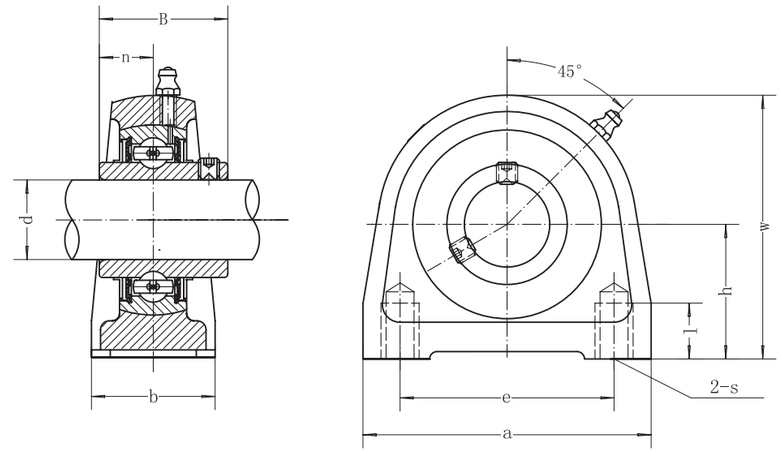

Unit No.	Dimensions mm / in.										Bolt Size mm / inch	Bearing No.	Housing No.	Weight (kg)
	d	h	a	e	b	s	l	w	B	n				
UCSHE201	12	30.2	63	47	30	M8	10	57	27.4	11.5	M8	UCS201	SHE03	0.32
UCSHE202	15	1-3/16	2-31/64	1-27/32	1-3/16		25/64	2-1/4	1.0787	0.4527		UCS202		
UCSHE203	17											UCS203		
UCSHE204	20	33.3 1-5/16	65 2-9/16	50.8 2	32 1-17/64	M8	10 25/64	64 2-33/64	31 1.2205	12.7 0.500	M8	UC204	SHE04	0.35
UCSHE205	25	36.5 1-7/16	70 2-3/4	50.8 2	36 1-27/64	M10	12.5 31/64	70 2-3/4	34.1 1.3425	14.3 0.563	M10	UC205	SHE05	0.41
UCSHE206	30	42.9 1-11/16	98 3-55/64	76.2 3	40 1-37/64	M10	12.5 31/64	82 3-15/64	38.1 1.5000	15.9 0.626	M10	UC206	SHE06	0.74
UCSHE207	35	47.6 1-7/8	103 4-1/16	82.6 3-1/4	45 1-49/64	M10	12.5 31/64	93 3-21/32	42.9 1.6890	17.5 0.689	M10	UC207	SHE07	0.96
UCSHE208	40	49.2 1-15/16	116 4-9/16	88.9 3-1/2	48 1-57/64	M12	15 19/32	99 3-57/64	49.2 1.9370	19 0.748	M12	UC208	SHE08	1.22
UCSHE209	45	54.0 2-1/8	120 4-47/64	95.3 3-3/4	48 1-57/64	M12	15 19/32	107 4-7/32	49.2 1.9370	19 0.748	M12	UC209	SHE09	1.45
UCSHE210	50	57.2 2-1/4	135 5-5/16	101.6 4	54 2-1/8	M16	20 25/32	115 4-17/32	51.6 2.0315	19 0.748	M16	UC210	SHE10	2.02
UCSHE211	55	64.0 2-33/64	150 5-29/32	118 4-41/64	60 2-23/64	M16	20 25/32	125 4-59/64	55.6 2.1890	22.2 0.874	M16	UC211	SHE11	2.10
UCSHE212	60	69.9 2-3/4	150 5-29/32	118 4-41/64	60 2-23/64	M16	20 25/32	140 5-33/64	65.1 2.5630	25.4 1.000	M16	UC212	SHE12	2.70

UCTB2 (Normal-duty)

Pillow Blocks

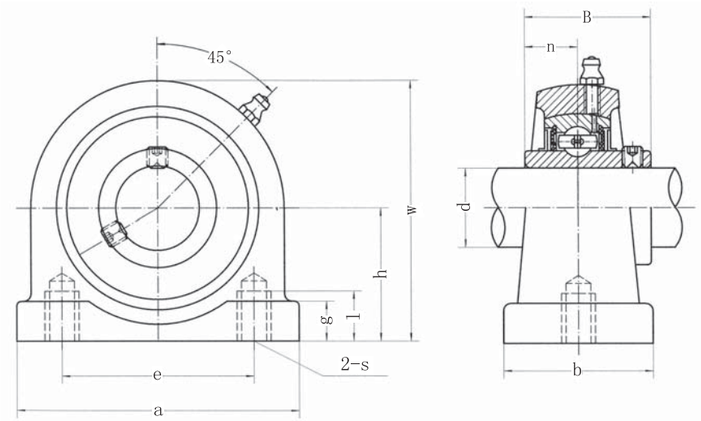

Unit No.	Dimensions mm / in.											Bolt Size mm / inch	Bearing No.	Housing No.	Weight (kg)
	d	h	a	e	b	s	g	l	w	B	n				
UCTB204	20	33.3	65	50.8	32	3/8-16	15	14.5	64	31	12.7	3/8-16	UC204	TB204	0.46
UCTB204-12	3/4	1-5/16	2-9/16	2	1-17/64	UNF	19/32	37/64	2-33/64	1.2205	0.500	UNF	UC204-12		
UCTB205	25	36.5	70	50.8	36	3/8-16 UNF	15	13	70	34.1	14.3	3/8-16 UNF	UC205	TB205	0.67
UCTB205-13	13/16	1-7/16	2-3/4	2	1-27/64		19/32	33/64	2-3/4	1.3425	0.563		UC205-13		0.71
UCTB205-14	7/8												UC205-14		0.70
UCTB205-15	15/16												UC205-15		0.68
UCTB205-16	1												UC205-16		0.67
UCTB206	30	42.9	98	76.2	40	7/16-14 UNF	18	16	82	38.1	15.9	7/16-14 UNF	UC206	TB206	1.12
UCTB206-17	1-1/16	1-11/16	3-55/64	3	1-37/64		45/64	5/8	3-15/64	1.5000	0.626		UC206-17		1.15
UCTB206-18	1-1/8												UC206-18		1.14
UCTB206-19	1-3/16												UC206-19		1.12
UCTB206-20	1-1/4												UC206-20		1.11
UCTB207	35	47.6	103	82.6	45	1/2-13 UNF	20	19	93	42.9	17.5	1/2-13 UNF	UC207	TB207	1.38
UCTB207-20	1-1/4	1-7/8	4-1/16	3-1/4	1-49/64		25/32	3/4	3-21/32	1.6890	0.689		UCS207-20		1.44
UCTB207-21	1-5/16												UC207-21		1.41
UCTB207-22	1-3/8												UC207-22		1.38
UCTB207-23	1-7/16												UC207-23		1.35
UCTB208	40	49.2	116	88.9	48	1/2-13 UNF	20	19	99	49.2	19	1/2-13 UNF	UC208	TB208	1.86
UCTB208-24	1-1/2	1-15/16	4-9/16	3-1/2	1-57/64		25/32	3/4	3-57/64	1.9370	0.748		UC208-24		1.90
UCTB208-25	1-9/16												UC208-25		1.87
UCTB209	45	53.9	120	95.3	48	1/2-13 UNF	25	19	107	49.2	19	1/2-13 UNF	UC209	TB209	1.92
UCTB209-26	1-5/8	2-1/8	4-23/32	3-3/4	1-57/64		63/64	3/4	4-7/32	1.9370	0.748		UC209-26		2.02
UCTB209-27	1-11/16												UC209-27		1.98
UCTB209-28	1-3/4												UC209-28		1.94
UCTB210	50	57.2	135	101.6	54	5/8-11 UNF	25	22	115	51.6	19	5/8-11 UNF	UC210	TB210	2.24
UCTB210-29	1-13/16	2-1/4	5-5/16	4	2-1/8		63/64	55/64	4-17/32	2.0315	0.748		UC210-29		2.36
UCTB210-30	1-7/8												UC210-30		2.31
UCTB210-31	1-15/16												UC210-31		2.26
UCTB210-32	2												UC210-32		2.22

Pillow Blocks

UCSHE2(Normal-duty)

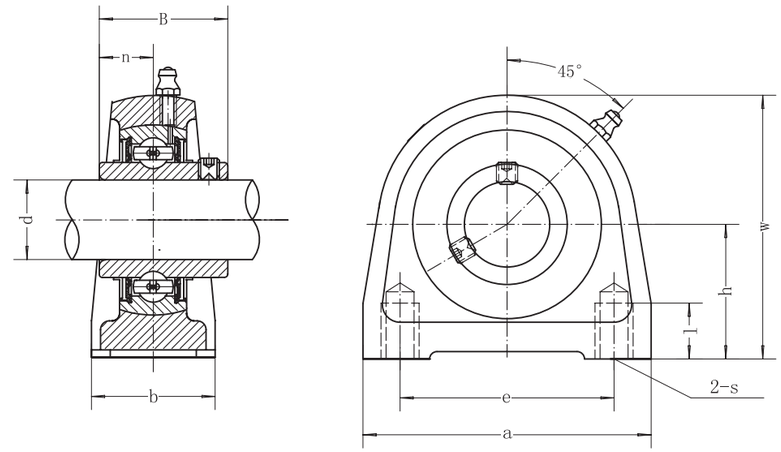

Unit No.	Dimensions mm / in.										Bolt Size mm / inch	Bearing No.	Housing No.	Weight (kg)
	d	h	a	e	b	s	l	w	B	n				
UCSHE201	12	30.2	63	47	30	M8	10	57	27.4	11.5	M8	UCS201	SHE03	0.32
UCSHE202	15	1-3/16	2-31/64	1-27/32	1-3/16		25/64	2-1/4	1.0787	0.4527		UCS202		
UCSHE203	17											UCS203		
UCSHE204	20	33.3 1-5/16	65 2-9/16	50.8 2	32 1-17/64	M8	10 25/64	64 2-33/64	31 1.2205	12.7 0.500	M8	UC204	SHE04	0.35
UCSHE205	25	36.5 1-7/16	70 2-3/4	50.8 2	36 1-27/64	M10	12.5 31/64	70 2-3/4	34.1 1.3425	14.3 0.563	M10	UC205	SHE05	0.41
UCSHE206	30	42.9 1-11/16	98 3-55/64	76.2 3	40 1-37/64	M10	12.5 31/64	82 3-15/64	38.1 1.5000	15.9 0.626	M10	UC206	SHE06	0.74
UCSHE207	35	47.6 1-7/8	103 4-1/16	82.6 3-1/4	45 1-49/64	M10	12.5 31/64	93 3-21/32	42.9 1.6890	17.5 0.689	M10	UC207	SHE07	0.96
UCSHE208	40	49.2 1-15/16	116 4-9/16	88.9 3-1/2	48 1-57/64	M12	15 19/32	99 3-57/64	49.2 1.9370	19 0.748	M12	UC208	SHE08	1.22
UCSHE209	45	54.0 2-1/8	120 4-47/64	95.3 3-3/4	48 1-57/64	M12	15 19/32	107 4-7/32	49.2 1.9370	19 0.748	M12	UC209	SHE09	1.45
UCSHE210	50	57.2 2-1/4	135 5-5/16	101.6 4	54 2-1/8	M16	20 25/32	115 4-17/32	51.6 2.0315	19 0.748	M16	UC210	SHE10	2.02
UCSHE211	55	64.0 2-33/64	150 5-29/32	118 4-41/64	60 2-23/64	M16	20 25/32	125 4-59/64	55.6 2.1890	22.2 0.874	M16	UC211	SHE11	2.10
UCSHE212	60	69.9 2-3/4	150 5-29/32	118 4-41/64	60 2-23/64	M16	20 25/32	140 5-33/64	65.1 2.5630	25.4 1.000	M16	UC212	SHE12	2.70

UCFA2 (Normal-duty)

Flange Units

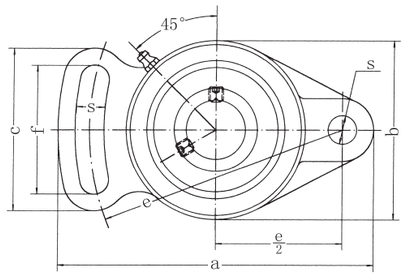

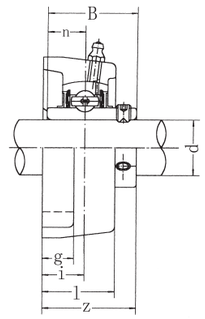

Unit No.	Dimensions mm in.													Bolt Size mm inch	Bearing No.	Housing No.	Weight (kg)
	d	a	e	i	g	l	S	b	z	f	c	B	n				
UCFA201	12	98	78	15	12	25.5	10	60	33.3	40	50	31	12.7	M8	UC201	FA204	0.50
UCFA201-8	1/2														UC201-8		0.49
UCFA202	15														UC202		0.49
UCFA202-9	9/16														UC202-9		0.49
UCFA202-10	5/8	3-55/64	3-5/64	19/32	15/32	1	25/64	2-3/8	1-5/16	1-37/64	1-31/32	1.2205	0.500	5/16	UC202-10		0.49
UCFA203	17														UC203		0.48
UCFA203-11	11/16														UC203-11		0.47
UCFA204	20														UC204		0.46
UCFA204-12	3/4														UC204-12		0.46
UCFA205	25	124	98	16	14	27	13	70	35.8	51	65	34.1	14.3	M10	UC205	FA205	0.66
UCFA205-13	13/16														UC205-13		0.70
UCFA205-14	7/8	4-7/8	3-55/64	5/8	35/64	1-1/16	33/64	2-3/4	1-13/32	2-1/64	2-9/16	1.3425	0.563	3/8	UC205-14		0.69
UCFA205-15	15/16														UC205-15		0.67
UCFA205-16	1														UC205-16		0.66
UCFA206	30	141	115	18	14	31	13	83	40.2	58	72	38.1	15.9	M10	UC206	FA206	0.93
UCFA206-17	1-1/16														UC206-17		0.96
UCFA206-18	1-1/8	5-35/64	4-17/32	45/64	35/64	1-7/32	33/64	3-17/64	1-19/32	2-9/32	2-27/32	1.5000	0.626	3/8	UC206-18		0.95
UCFA206-19	1-3/16														UC206-19		0.93
UCFA206-20	1-1/4														UC206-20		0.92
UCFA207	35	155	128	19	16	34	15	96	44.4	66	82	42.9	17.5	M12	UC207	FA207	1.46
UCFA207-20	1-1/4														UC207-20		1.52
UCFA207-21	1-5/16	6-7/64	5-3/64	3/4	5/8	1-11/32	19/32	3-25/32	1-3/4	2-19/32	3-15/64	1.6890	0.689	7/16	UC207-21		1.49
UCFA207-22	1-3/8														UC207-22		1.46
UCFA207-23	1-7/16														UC207-23		1.43
UCFA208	40	171	142	21	16	38	15	105	51.2	71	87	49.2	19	M12	UC208	FA209	1.78
UCFA208-24	1-1/2	47/64	5-19/32	53/64	5/8	1-1/2	19/32	4-9/64	2-1/64	2-51/64	3-27/64	1.9370	0.748	7/16	UC208-24		1.82
UCFA208-25	1-9/16														UC208-25		1.79
UCFA209	45	179	146	22	18	40	17	111	52.2	72	90	49.2	19	M14	UC209	FA209	2.03
UCFA209-26	1-5/8														UC209-26		2.13
UCFA209-27	1-11/16	7-3/64	5-3/4	55/64	45/64	1-37/64	43/64	4-3/8	2-1/16	2-53/64	3-35/64	1.9370	0.748	1/2	UC209-27		2.09
UCFA209-28	1-3/4														UC209-28		2.05
UCFA210	50	189	155	22	18	40	17	116	54.6	76	94	51.6	19	M14	UC210	FA210	2.23
UCFA210-29	1-13/16														UC210-29		2.35
UCFA210-30	1-7/8	7-7/16	6-7/64	55/64	45/64	1-37/64	43/64	4-9/16	2-5/32	3	3-45/64	2.0315	0.748	1/2	UC210-30		2.30
UCFA210-31	1-15/16														UC210-31		2.25
UCFA210-32	2														UC210-32		2.21
UCFA211	55	216	182	25	20	44	17	133	58.4	86	104	55.6	2G2.2	M14	UC211	FA211	3.41
UCFA211-32	2														UC211-32		3.56
UCFA211-33	2-1/16	8-1/2	7-11/64	63/64	25/32	1-47/64	43/64	5-51/64	2-5/16	3-25/64	4-3/32	2.1890	0.874	1/2	UC211-33		3.5
UCFA211-34	2-1/8														UC211-34		3.45
UCFA211-35	2-3/16														UC211-35		3.39
UCFA212	60	240	202	29	20	48	19	140	68.7	100	118	65.1	25.4	M16	UC212	FA212	4.14
UCFA212-36	2-1/4														UC212-36		4.27
UCFA212-37	2-5/16	9-29/64	7-61/64	1-9/64	25/32	1-7/8	3/4	5-1/2	2-23/32	3-15/16	4-41/64	2.5630	1.000	5/8	UC212-37		4.19
UCFA212-38	2-3/8														UC212-38		4.12
UCFA212-39	2-7/16														UC212-39		4.05
UCFA213	65	250	210	30	20	50	19	155	69.7	102	122	65.1	25.4	M16	UC213	FA213	5.35
UCFA213-40	2-1/2	9-27/32	8-17/64	1-3/16	25/32	1-31/32	3/4	6-3/32	2-3/4	4-1/64	4-51/64	2.5630	1.000	5/8	UC213-40		5.44
UCFA213-41	2-9/16														UC213-41		5.35

Flange Units

UCFB2 (Normal-duty)

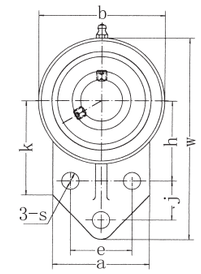

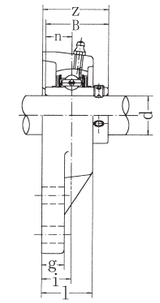

Unit No.	Dimensions mm in.															Bolt Size mm inch	Bearing No.	Housing No.	Weight (kg)
	d	w	b	k	a	l	S	g	h	j	e	i	z	B	n				
UCFB201	12	110	62	52	52	25.5	10	13	42	27	32	15	33.3	31	12.7	M8	UC201	FB204	0.58
UCFB201-8	1/2																UC201-8		0.57
UCFB202	15																UC202		0.57
UCFB202-9	9/16																UC202-9		0.57
UCFB202-10	5/8	4-11/32	2-7/16	2-1/16	2-1/16	1	25/64	1/2	1-21/32	1-1/16	1-17/64	19/32	1-5/16	1.2205	0.500	5/16	UC202-10		0.57
UCFB203	17																UC203		0.56
UCFB203-11	11/16																UC203-11		0.55
UCFB204	20																UC204		0.54
UCFB204-12	3/4																UC204-12		0.54
UCFB205	25	116	68	52	56	27	10	13	45	27	34	16	35.8	34.1	14.3	M8	UC205	FB205	0.79
UCFB205-13	13/16																UC205-13		0.83
UCFB205-14	7/8	4-9/16	2-11/16	2-1/16	2-7/32	1-1/16	25/64	1/2	1-49/64	1-1/16	1-11/32	5/8	1-13/32	1.3425	0.563	5/16	UC205-14		0.82
UCFB205-15	15/16																UC205-15		0.80
UCFB205-16	1																UC205-16		0.79
UCFB206	30	130	78	55	65	31	10	13	50	29	40	18	40.2	38.1	15.9	M8	UC206	FB206	0.95
UCFB206-17	1-1/16																UC206-17		0.98
UCFB206-18	1-1/8	5-1/8	3-1/16	2-5/32	2-9/16	1-7/32	25/64	1/2	1-31/32	1-9/64	1-37/64	45/64	1-19/32	1.5000	0.626	5/16	UC206-18		0.97
UCFB206-19	1-3/16																UC206-19		0.95
UCFB206-20	1-1/4																UC206-20		0.94
UCFB207	35	144	90	62	70	34	10	15	55	32	46	19	44.4	42.9	17.5	M8	UC207	FB207	1.29
UCFB207-20	1-1/4																UC207-20		1.35
UCFB207-21	1-5/16	5-21/32	3-35/64	2-7/16	2-3/4	1-11/32	25/64	19/32	2-11/64	1-17/64	1-13/16	3/4	1-3/4	1.6890	0.689	5/16	UC207-21		1.32
UCFB207-22	1-3/8																UC207-22		1.29
UCFB207-23	1-7/16																UC207-23		1.26
UCFB208	40	164	100	72	78	36	12	16	60	41	50	21	51.2	49.2	19	M10	UC208	FB208	1.78
UCFB208-24	1-1/2	6-15/32	3-15/16	2-27/32	3-1/16	1-13/32	15/32	5/8	2-23/64	1-39/64	1-31/32	53/64	2-1/64	1.9370	0.748	3/8	UC208-24		1.82
UCFB208-25	1-9/16																UC208-25		1.79
UCFB209	45	174	106	76	80	38	12	18	65	43	54	22	52.2	49.2	19	M10	UC209	FB209	1.91
UCFB209-26	1-5/8																UC209-26		2.01
UCFB209-27	1-11/16	6-27/32	4-3/16	3	3-5/32	1-1/2	15/32	23/32	2-9/16	1-11/16	2-1/8	55/64	2-1/16	1.9370	0.748	3/8	UC209-27		1.97
UCFB209-28	1-3/4																UC209-28		1.93
UCFB210	50	184	112	82	86	40	12	18	68	46	58	22	54.6	51.6	19	M10	UC210	FB210	2.36
UCFB210-29	1-13/16																UC210-29		2.48
UCFB210-30	1-7/8	7-1/4	4-13/32	3-7/32	3-3/8	1-37/64	15/32	23/32	2-43/64	1-13/16	2-9/32	55/64	2-5/32	2.0315	0.748	3/8	UC210-30		2.43
UCFB210-31	1-15/16																UC210-31		2.38
UCFB210-32	2																UC210-32		2.34
UCFB211	55	207	130	86	90	43	14	18	78	50	62	25	58.4	55.6	22.2	M12	UC211	FB211	3.15
UCFB211-32	2																UC211-32		3.31
UCFB211-33	2-1/16	8-5/32	5-1/8	3-25/64	3-35/64	1-11/16	35/64	45/64	3-5/64	1-31/32	2-7/16	63/64	2-5/16	2.1890	0.874	7/16	UC211-33		3.25
UCFB211-34	2-1/8																UC211-34		3.20
UCFB211-35	2-3/16																UC211-35		3.14
UCFB212	60	223	140	90	94	48	14	18	84	55	66	29	68.7	65.1	25.4	M12	UC212	FB212	3.99
UCFB212-36	2-1/4																UC212-36		4.12
UCFB212-37	2-5/16	8-25/32	5-1/2	3-35/64	3-45/64	1-7/8	35/64	45/64	3-5/16	2-11/64	2-19/32	1-9/64	2-23/32	2.5630	1.000	7/16	UC212-37		4.04
UCFB212-38	2-3/8																UC212-38		3.97
UCFB212-39	2-7/16																UC212-39		3.90
UCFB213	65	244	155	94	100	50	14	20	92	60	70	30	69.7	65.1	25.4	M12	UC213	FB213	5.21
UCFB213-40	2-1/2	9-39/64	6-7/64	3-45/64	3-15/16	1-31/32	35/64	25/32	3-5/8	2-23/64	2-3/4	1-3/16	2-3/4	2.5630	1.000	7/16	UC213-40		5.3
UCFB213-41	2-9/16																UC213-41		5.21

UCHA2(Normal-duty) Screw Conveyor Hanger Units

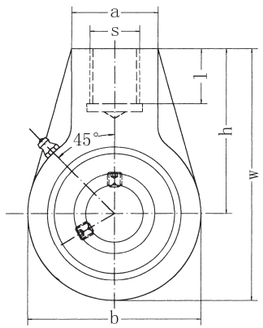

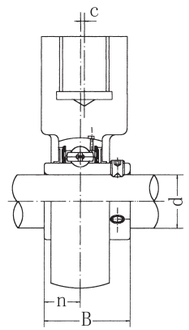

Unit No.	Dimensions mm in.										Bearing No.	Housing No.	Weight (kg)
	d	h	w	b	c	a	S	l	B	n			
UCHA201	12	64	96	64	0	40		19	31	12.7	UC201		0.73
UCHA201-8	1/2										UC201-8		0.72
UCHA202	15										UC202		0.72
UCHA202-9	9/16										UC202-9		0.72
UCHA202-10	5/8										UC202-10	HA204	0.72
UCHA203	17	2-33/64	3-25/32	2-33/64	0	1-37/64	G-3/4	3/4	1.2205	0.500	UC203		0.71
UCHA203-11	11/16										UC203-11		0.70
UCHA204	20										UC204		0.69
UCHA204-12	3/4										UC204-12		0.69
UCHA205	25	64	103	78	0	40		19	34.1	14.3	UC205		0.83
UCHA205-13	13/16										UC205-13		0.87
UCHA205-14	7/8	2-33/64	4-1/16	3-5/64	0	1-37/64	G-3/4	3/4	1.3425	0.563	UC205-14	HA205	0.86
UCHA205-15	15/16										UC205-15		0.84
UCHA205-16	1										UC205-16		0.83
UCHA206	30	64	103	78	0	40		19	38.1	15.9	UC206		0.83
UCHA206-17	1-1/16										UC206-17		0.86
UCHA206-18	1-1/8	2-33/64	4-1/16	3-5/64	0	1-37/64	G-3/4	3/4	1.5000	0.626	UC206-18	HA206	0.85
UCHA206-19	1-3/16										UC206-19		0.83
UCHA206-20	1-1/4										UC206-20		0.82
UCHA207	35	70	116	92	0	40		19	42.9	17.5	UC207		1.16
UCHA207-20	1-1/4										UC207-20		1.22
UCHA207-21	1-5/16	2-3/4	4-9/16	3-5/8	0	1-37/64	G-3/4	3/4	1.6890	0.689	UC207-21	HA207	1.19
UCHA207-22	1-3/8										UC207-22		1.16
UCHA207-23	1-7/16										UC207-23		1.13
UCHA208	40	73	121	96	2	40		19	49.2	19	UC208		1.32
UCHA208-24	1-1/2	2-7/8	4-49/64	3-25/32	5/64	1-37/64	G-3/4	3/4	1.9370	0.748	UC208-24	HA208	1.36
UCHA208-25	1-9/16										UC208-25		1.33
UCHA209	45	82	136	108	5	48		21	49.2	19	UC209		1.92
UCHA209-26	1-5/8										UC209-26		2.02
UCHA209-27	1-11/16	3-15/64	5-23/64	4-1/4	13/64	1-57/64	G1	53/64	1.9370	0.748	UC209-27	HA209	1.98
UCHA209-28	1-3/4										UC209-28		1.94
UCHA210	50	83	142	118	5	48		21	51.6	19	UC210		1.90
UCHA210-29	1-13/16										UC210-29		2.02
UCHA210-30	1-7/8	3-17/64	5-19/32	4-41/64	13/64	1-57/64	G1	53/64	2.0315	0.748	UC210-30	HA210	1.97
UCHA210-31	1-15/16										UC210-31		1.92
UCHA210-32	2										UC210-32		1.88
UCHA211	55	87	150	126	7	60		25	55.6	22.2	UC211		2.61
UCHA211-32	2										UC211-32		2.76
UCHA211-33	2-1/16	3-27/64	5-29/32	4-61/64	9/32	2-23/64	G1-1/4	63/64	2.1890	0.874	UC211-33	HA211	2.70
UCHA211-34	2-1/8										UC211-34		2.65
UCHA211-35	2-3/16										UC211-35		2.59
UCHA212	60	102	173	142	9	60		28	65.1	25.4	UC212		3.54
UCHA212-36	2-1/4										UC212-36		3.67
UCHA212-37	2-5/16	4-1/64	6-13/16	5-19/32	23/64	2-23/64	G1-1/4	1-7/64	2.5630	1.000	UC212-37	HA212	3.59
UCHA212-38	2-3/8										UC212-38		3.52
UCHA212-39	2-7/16										UC212-39		3.45
UCHA213	65	117	200	166	9.5	70		32	65.1	25.4	UC213		5.80
UCHA213-40	2-1/2	4-39/64	7-7/8	6-17/32	3/8	2-3/4	G1-1/2	1-17/64	2.5630	1.000	UC213-40	HA213	5.89
UCHA213-41	2-9/16										UC213-41		5.80
UCHA214	70	117	200	166	9.5	70		32	74.6	30.2	UC214		
UCHA214-42	2-5/8										UC214-42	HA214	5.67
UCHA214-43	2-11/16	4-39/64	7-7/8	6-17/32	3/8	2-3/4	G1-1/2	1-17/64	2.9370	1.189	UC214-43		
UCHA214-44	2-3/4										UC214-44		
UCHA215	75	117	200	166	9.5	70		32	77.8	33.3	UC215		
UCHA215-45	2-13/16										UC215-45		
UCHA215-46	2-7/8	4-39/64	7-7/8	6-17/32	3/8	2-3/4	G1-1/2	1-17/64	3.0630	1.311	UC215-46	HA215	5.58
UCHA215-47	2-15/16										UC215-47		
UCHA215-48	3										UCHA215-48		

Screw Conveyor Hanger Units UCHE2 (Normal-duty)

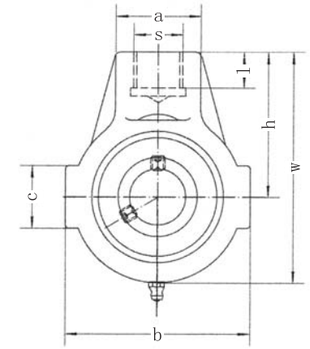

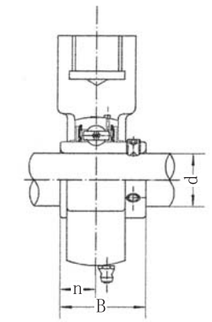

Unit No.	Dimensions mm in.										Bearing No.	Housing No.	Weight (kg)
	d	h	w	b	c	a	s	l	B	n			
UCHE201	12	58	91	65	38	30		21	31	12.7	UC201		0.61
UCHE201-8	1/2										UC201-8		0.60
UCHE202	15										UC202		0.60
UCHE202-9	9/16										UC202-9	HE204	0.60
UCHE202-10	5/8	2-9/32	3-37/64	2-9/16	1-1/2	1-3/16	M16	53/64	1.2205	0.500	UC202-10		0.60
UCHE203	17										UC203		0.59
UCHE203-11	11/16										UC203-11		0.58
UCHE204	20										UC204		0.57
UCHE204-12	3/4										UC204-12		0.57
UCHE205	25	64	99	70	38	35		22	34.1	14.3	UC205		0.72
UCHE205-13	13/16										UC205-13		0.76
UCHE205-14	7/8	2-33/64	3-57/64	2-3/4	1-1/2	1-3/8	M20	55/64	1.3425	0.563	UC205-14	HE205	0.75
UCHE205-15	15/16										UC205-15		0.73
UCHE205-16	1										UC205-16		0.72
UCHE206	30	72	114	85	40	40		24	38.1	15.9	UC206		1.12
UCHE206-17	1-1/16										UC206-17		1.13
UCHE206-18	1-1/8	2-53/64	4-31/64	3-11/32	1-37/64	1-37/64	M24	15/16	1.5000	0.626	UC206-18	HE206	1.14
UCHE206-19	1-3/16										UC206-19		1.12
UCHE206-20	1-1/4										UC206-20		1.11
UCHE207	35	76	122	90	40	40		24	42.9	17.5	UC207		1.25
UCHE207-20	1-1/4										UC207-20		1.31
UCHE207-21	1-5/16	3	4-51/64	3-35/64	1-37/64	1-37/64	M24	15/16	1.6890	0.689	UC207-21	HE207	1.28
UCHE207-22	1-3/8										UC207-22		1.25
UCHE207-23	1-7/16										UC207-23		1.22
UCHE208	40	85	135	100	45	40		24	49.2	19	UC208		1.61
UCHE208-24	1-1/2	3-11/32	5-5/16	3-15/16	1-25/32	1-37/64	M24	15/16	1.9370	0.748	UC208-24	HE209	1.65
UCHE208-25	1-9/16										UC208-25		1.62
UCHE209	45								49.2	19	UC209		2.04
UCHE209-26	1-5/8										UC209-26	HE209	2.14
UCHE209-27	1-11/16	90	145	110	46	40		24	1.9370	0.748	UC209-27		2.10
UCHE209-28	1-3/4										UC209-28		2.06
UCHE210	50						M24		51.6	19	UC210		1.91
UCHE210-29	1-13/16										UC210-29		2.03
UCHE210-30	1-7/8	3-35/64	5-45/64	4-21/64	1-13/16	1-37/64		15/16	2.0315	0.748	UC210-30	HE210	1.98
UCHE210-31	1-15/16										UC210-31		1.93
UCHE210-32	2										UC210-32		2.01

SAFD2
(SA2-Fitted)

Flange Unit
(Light duty)

SBFD2
(SB2-Fitted)

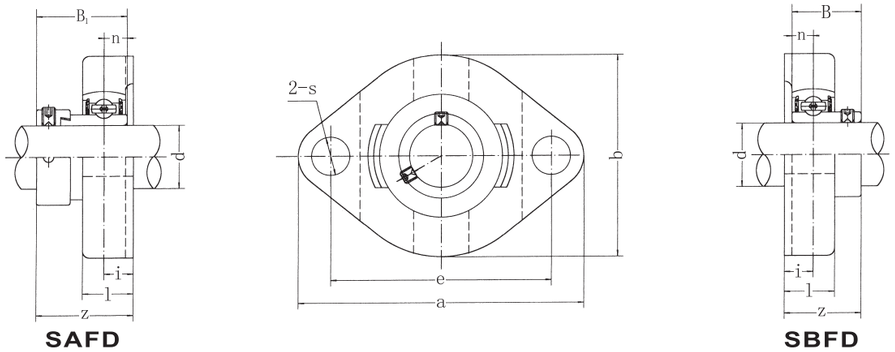

Unit No.	Dimensions mm in. d	a	e	b	i	s	l	Bolt Size mm inch	SAFD z	B1	n	Bearing No.	Weight (kg)	SBFD z	B	n	Bearing No.	Weight (kg)	Housing No.
SAFD SBFD 201	12	81	63	59	8.5	7	15	M6	30.6	28.6	6.5	SA201		24	22	6	SB201		
201-8	1/2											SA201-8					SB201-8		
202	15											SA202					SB202		
202-9	9/16	3-3/16	2-31/64	2-21/64	21/64	9/32	19/32	1/4	1-13/64	1.1260	0.2559	SA202-9	0.3	61/64	0.8661	0.2362	SB202-9	0.3	FD203
202-10	5/8											SA202-10					SB202-10		
203	17											SA203					SB203		
203-11	11/16											SA203-11					SB203-11		
SAFD SBFD 204	20	90	71	67	9.5	10	17	M8	33	31	7.5	SA204		27.5	25	7	SB204		
204-12	3/4	3-35/64	2-51/64	2-41/64	3/8	25/64	43/64	5/16	1-19/64	1.2204	0.2953	SA204-12	0.5	1-5/64	0.9843	0.2756	SB204-12	0.4	FD204
SAFD SBFD 205	25	95	76	71	9.5	10	17	M8	33	31	7.5	SA205		29	27	7.5	SB205		
205-13	13/16											SA205-13					SB205-13		
205-14	7/8	3-3/4	2-63/64	2-51/64	3/8	25/64	43/64	5/16	1-19/64	1.2204	0.2953	SA205-14	0.5	1-9/64	1.0630	0.2953	SB205-14	0.5	FD205
205-15	15/16											SA205-15					SB205-15		
205-16	1											SA205-16					SB205-16		
SAFD SBFD 206	30	113	90	84	12	12	21	M10	38.7	35.7	9	SA206		34	30	8	SB206		
206-17	1-1/16											SA206-17					SB206-17		
206-18	1-1/8	4-7/16	3-35/64	3-5/16	15/32	15/32	53/64	3/8	1-17/32	1.4055	0.3543	SA206-18	0.8	1-11/32	1.1811	0.3150	SB206-18	0.8	FD206
206-19	1-3/16											SA206-19					SB206-19		
206-20	1-1/4											SA206-20					SB206-20		
SAFD SBFD 207	35	125	100	94	12.5	12	22	M10	41.9	38.9	9.5	SA207		36	32	8.5	SB207		
207-20	1-1/4											SA207-20					SB207-20		
207-21	1-5/16	4-59/64	3-15/16	3-45/64	1/2	15/32	7/8	3/8	1-21/32	1.5315	0.3740	SA207-21	1.0	1-27/64	1.2598	0.3346	SB207-21	0.9	FD207
207-22	1-3/8											SA207-22					SB207-22		
207-23	1-7/16											SA207-23					SB207-23		

SAFW2
(SA-2-Fitted)

Flange Unit
(Light duty)

SBFW2
(SB-2-Fitted)

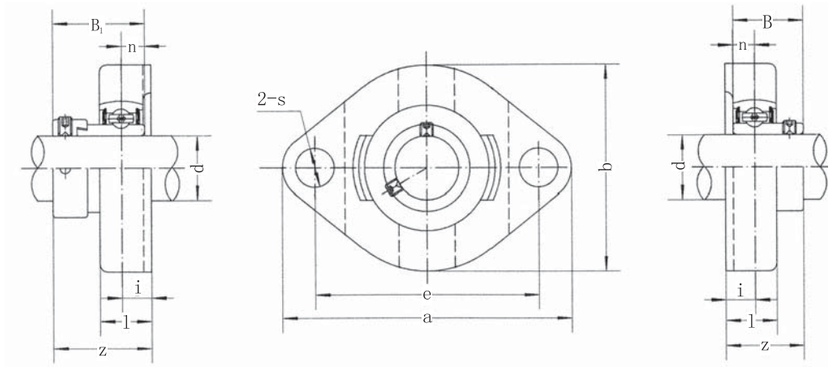

Unit No.	Dimensions mm in. d	a	e	b	i	s	l	Bolt Size mm inch	SAFW2 z	B1	n	Bearing No.	Weight (kg)	SBFW2 z	B	n	Bearing No.	Weight (kg)	Housing No.
SAFW SBFW 201	12	81	63.5	58.7	8.5	7	15	M6	30.6	28.6	6.5	SA201		24.5	22	6	SB201		
201-8	1/2											SA201-8					SB201-8		
202	15											SA202					SB202		
202-9	9/16	3-3/16	2-1/2	2-5/16	21/64	9/32	19/32	1/4	1-13/64	1.1260	0.2559	SA202-9	0.3	31/32	0.8661	0.2362	SB202-9	0.3	FW203
202-10	5/8											SA202-10					SB202-10		
203	17											SA203					SB203		
203-11	11/16											SA203-11					SB203-11		
SAFW SBFW 204	20	90.5	71.4	66.5	9.5	9	17	M8	33	31	7.5	SA204		27.5	25	7	SB204		
204-12	3/4	3-9/16	2-13/16	2-5/8	3/8	23/64	43/64	5/16	1-19/64	1.2204	0.2953	SA204-12	0.5	1-5/64	0.9843	0.2756	SB204-12	0.4	FW204
SAFW SBFW 205	25	97	76.2	71	9.5	9	17.5	M8	33	31	7.5	SA205		29	27	7.5	SB205		
205-13	13/16											SA205-13					SB205-13		
205-14	7/8	3-13/16	3	2-51/64	3/8	23/64	11/16	5/16	1-19/64	1.2204	0.2953	SA205-14	0.5	1-9/64	1.0630	0.2953	SB205-14	0.5	FW205
205-15	15/16											SA205-15					SB205-15		
205-16	1											SA205-16					SB205-16		
SAFW SBFW 206	30	112.5	90.5	84	11.5	11.5	20.5	M10	38.2	35.7	9	SA206		33.5	30	8	SB206		
206-17	1-1/16											SA206-17					SB206-17		
206-18	1-1/8	4-7/16	3-9/16	3-5/16	29/64	29/64	3/8	3/8	1-1/2	1.4055	0.3543	SA206-18	0.8	1-5/16	1.1811	0.3150	SB206-18	0.8	FW206
206-19	1-3/16											SA206-19					SB206-19		
206-20	1-1/4											SA206-20					SB206-20		
SAFW SBFW 207	35	126	100	94	12.5	11.5	22	M10	41.9	38.9	9.5	SA207		36	32	8.5	SB207		
207-20	1-1/4											SA207-20					SB207-20		
207-21	1-5/16	4-61/64	3-15/16	3-45/64	1/2	29/64	7/8	3/8	1-21/32	1.5315	0.3740	SA207-21	1.0	1-27/64	1.2598	0.3364	SB207-21	0.9	FW207
207-22	1-3/8											SA207-22					SB207-22		
207-23	1-7/16											SA207-23					SB207-23		
SAFW SBFW 208	40	150	119	100	14.5	14	24	M12	47.2	43.7	11	SA208		39.5	34	9	SB208		
208-24	1-1/2	5-29/32	4-11/16	3-15/16	9/16	35/64	15/16	1/2	1-55/64	1.7205	0.4331	SA208-24	1.4	1-9/16	1.3386	0.3543	SB208-24	1.4	FW208
208-25	1-9/16											SA208-25					SB208-25		

SAFTD (SA2-Fitted) — Flange Unit (Light duty) — SBFTD (SB2-Fitted)

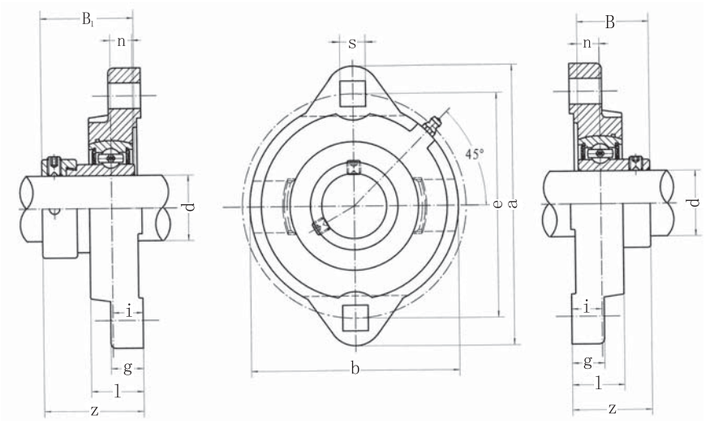

Unit No.		Dimensions mm in. d	a	e	b	i	s	g	l	Bolt Size mm inch	SAFTD2 z	B1	n	Bearing No.	Weight (kg)	SBFTD2 z	B	n	Bearing No.	Weight (kg)	Housing No.
SAFTD SBFTD	201	12	82	65	58	12	7.2	10.5	18		34.1	28.6	6.5	SA201		28	22	6	SB201		
	201-8	1/2												SA201-8					SB201-8		
	202	15												SA202					SB202		
	202-9	9/16	3-1/4	2-9/16	2-9/32	15/32	9/32	27/64	45/64	1/4	1-11/32	1.1260	0.2559	SA202-9	0.28	1-7/64	0.8661	0.2362	SB202-9	0.25	PFTD203
	202-10	5/8												SA202-10					SB202-10		
	203	17												SA203					SB203		
	203-11	11/16												SA203-11					SB203-11		
SAFTD SBFTD	204	20	94	71.5	66	12.5	8.7	11	19.5	5/16	36	31	7.5	SA204	0.38	30.5	25	7	SB204	0.35	PFTD204
	204-12	3/4	3-11/16	2-13/16	2-39/64	1/2	11/32	7-16	49/64		1-27/64	1.2204	0.2953	SA204-12		1-13/64	0.9843	0.2756	SB204-12		
SAFTD SBFTD	205	25	98	76.2	69	12.5	8.7	11	20	5/16	36	31	7.5	SA205	0.41	32	27	7.5	SB205	0.37	PFTD205
	205-13	13/16												SA205G-13					SB205-13		
	205-14	7/8	3-7/8	3	2-23/32	1/2	11/32	7/16	25/32		1-27/64	1.2204	0.2953	SA205-14		1-17/64	1.0630	0.2953	SB205-14		
	205-15	15/16												SA205-15					SB205-15		
	205-16	1												SA205-16					SB205-16		
SAFTD SBFTD	206	30	116	89.5	81	13.7	10.3	13	22	3/8	40.4	35.7	9	SA206	0.64	35.7	30	8	SB206	0.59	PFTD206
	206-17	1-1/16												SA206-17					SB206G-17		
	206-18	1-1/8	4-9/16	3-17/32	3-13/64	35/64	13/32	33/64	55/64		1-19/32	1.4055	0.3543	SA206-18		1-13/32	1.1811	0.3150	SB206-18		
	206-19	1-3/16												SA206-19					SB206-19		
	206-20	1-1/4												SA206-20					SB206-20		

Note: To specify relubricatable units, add "G" suffix, (e.g., SBFTD205-16G)

SAFCT (SA-2-Fitted) — Flange Unit (Light duty) — SBFCT (SB-2-Fitted)

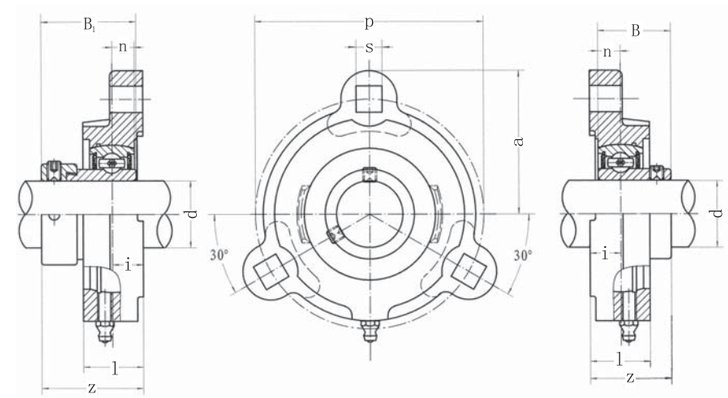

Unit No.		Dimensions mm in. d	a	p	j	l	s	Bolt Size mm inch	SAFCT2 z	B1	n	Bearing No.	Weight (kg)	SBFCT2 z	B	n	Bearing No.	Weight (kg)	Housing No.
SAFCT SBFCT	201	12	40.5	63.5	9.8	17.5	7.2		31.9	28.6	6.5	SA201		25.8	22	2	SB201		
	201-8	1/2										SA201-8					SB201-8		
	202	15										SA202					SB202		
	202-9	9/16										SA202-9	0.26				SB202-9	0.21	FCT203
	202-10	5/8	1-19/32	2-1/2	25/64	11/16	9/32	1/4	1-1/4	1.1260	0.2559	SA202-10		1-1/64	0.8661	0.2362	SB202-10		
	203	17										SA203					SB203		
	203-11	11/16										SA203-11					SB203-11		
SAFCT SBFCT	204	20	45.3	71.5	11	20	8.7	5/16	34.5	31	7.5	SA204	0.34	29.0	25	7	SB204	0.32	FCT204
	204-12	3/4	1-25/32	2-13/16	7/16	25/32	11/32		1-23/64	1.2204	0.2953	SA204-12		1-9/64	0.9843	0.2756	SB204-12		
SAFCT SBFCT	205	25	47.5	76.2	10.3	20	8.7		33.8	31	7.5	SA205		29.8	27	7.5	SB205		
	205-13	13/16										SA205-13					SB205-13		
	205-14	7/8	1-7/8	3	13/32	25/32	11/32	5/16	1-21/64	1.2204	0.2953	SA205-14	0.44	1-11/64	1.0630	0.2953	SB205-14	0.42	FCT205
	205-15	15/16										SA205-15					SB205-15		
	205-16	1										SA205-16					SB205-16		
SAFCT SBFCT	206	30	56.5	90.5	12	22	10.3		38.7	35.7	9	SA206		34.0	30	8	SB206		
	206-17	1-1/16										SA206-17					SB206-17		
	206-18	1-1/8	2-7/32	3-9/16	15/32	7/8	13/32	3/8	1-17/32	1.4055	0.3543	SA206-18	0.66	1-11/32	1.1811	0.3150	SB206-18	0.6	FCT206
	206-19	1-3/16										SA206-19					SB206-19		
	206-20	1-1/4										SA206-20					SB206-20		
SAFCT SBFCT	207	35	61	100	13	24	10.3		42.4	38.9	9.5	SA207		36.5	32	8.5	SB207		
	207-20	1-1/4										SA207-20	0.88				SB207-20	0.84	FCT207
	207-21	1-5/16	2-13/32	3-15/16	33/64	15/16	13/32	3/8	1-43/64	1.5315	0.3740	SA207-21		1-7/16	1.2598	0.3346	SB207-21		
	207-22	1-3/8										SA207-22					SB207-22		
	207-23	1-7/16										SA207-23					SB207-23		

Note: To specify relubricatable units, add "G" suffix, (e.g., SBFCT205-16G)

SAFX (SA2-Fitted) — Flange Unit (Light duty) — SBFX (SB2-Fitted)

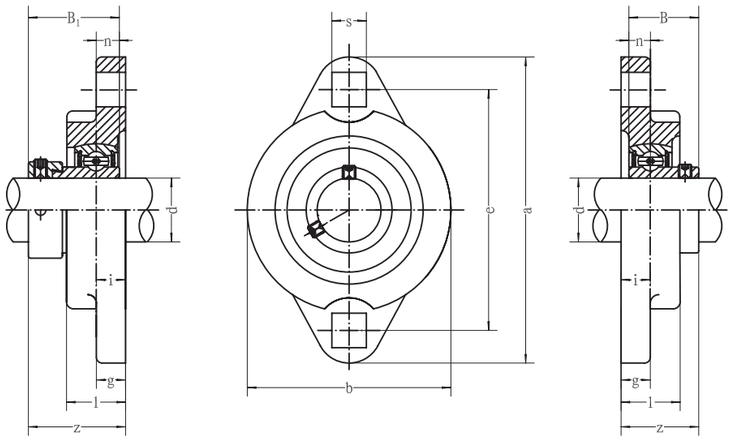

Unit No.	Dimensions mm in. d	a	e	b	i	s	g	l	Bolt Size mm inch	SAFX2 z	B1	n	Bearing No.	Weight (kg)	SBFX2 z	B	n	Bearing No.	Weight (kg)	Housing No.
SAFX SBFX 201	12	81	63.5	55	10.5	7.2	10.5	17.5		32.6	28.6	6.5	SA201		26.5	22	6	SB201		
201-8	1/2												SA201-8					SB201-8		
202	15												SA202					SB202		
202-9	9/16	3-3/16	2-1/2	2-3/16	13/32	9/32	13/32	11/16	1/4	1-9/32	1.1260	0.2559	SA202-9	0.22	1-3/64	0.8661	0.2362	SB202-9	0.2	FX203
202-10	5/8												SA202-10					SB202-10		
203	17												SA203					SB203		
203-11	11/16												SA203-11					SB203-11		
SAFX SBFX 204	20	90.5	71.5	57	10.5	8.7	11	20	5/16	34.0	31	7.5	SA204	0.36	28.5	25	7	SB204	0.33	FX204
204-12	3/4	3-9/16	2-13/16	2-1/4	13/32	11/32	7/16	25/32		1-11/32	1.2204	0.2953	SA204-12		1-1/8	0.9843	0.2756	SB204-12		
SAFX SBFX 205	25	95	76	63.5	11	8.7	11	20		34.5	31	7.5	SA205		30.5	27	7.5	SB205		
205-13	13/16												SA205-13					SB205-13		
205-14	7/8	3-3/4	2-63/64	2-1/2	7/16	11/32	7/16	25/32	5/16	1-23/64	1.2204	0.2953	SA205-14	0.4	1-13/64	1.0630	0.2953	SB205-14	0.36	FX205
205-15	15/16												SA205-15					SB205-15		
205-16	1												SA205-16					SB205-16		
SAFX SBFX 206	30	113	90.5	75	11	10.3	12	22.5		37.7	35.7	9	SA206		33	30	8	SB206		
206-17	1-1/16												SA206-17					SB206-17		
206-18	1-1/8	4-7/16	3-9/16	2-15/16	7/16	13/32	15/32	57/64	3/8	1-31/64	1.4055	0.3543	SA206-18	0.6	1-19/64	1.1811	0.3150	SB206-18	0.55	FX206
206-19	1-3/16												SA206-19					SB206-19		
206-20	1-1/4												SA206-20					SB206-20		
SAFX SBFX 207	35	122	100	86	12	10.3	13	24		41.1	38.9	9.5	SA207		35.2	32	8.5	SB207		
207-20	1-1/4												SA207-20	0.84				SB207-20	0.8	FX207
207-21	1-5/16	4-13/16	3-15/16	3-3/8	15/32	13/32	33/64	61/64	3/8	1-5/8	1.5315	0.3740	SA207-21		1-25/64	1.2598	0.3364	SB207-21		
207-22	1-3/8												SA207-22					SB207-22		
207-23	1-7/16												SA207-23					SB207-23		

SAPSD (SA-2-Fitted) — Flange Unit (Light duty) — SBPSD (SB-2-Fitted)

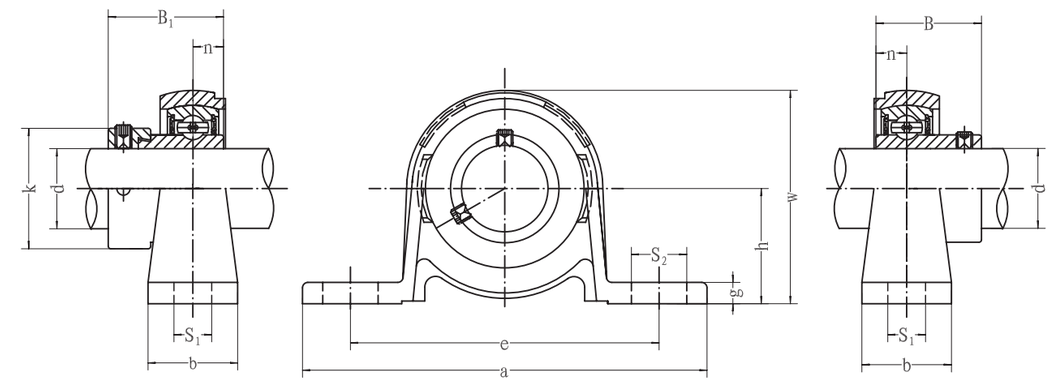

Unit No.	Dimensions mm in. d	h	a	e	b	S1	S2	g	w	Bolt Size mm inch	SAPSD2 B1	n	Bearing No.	Weight (kg)	SBPSD2 B	n	Bearing No.	Weight (kg)	Housing No.
SAPSD SBPSD 201	12	30.2	114	87	25	11	16	6.5	54		28.6	6.5	SA201		22	6	SB201		
201-8	1/2												SA201-8				SB201-8		
202	15												SA202				SB202		
202-9	9/16	1-3/16	4-1/2	3-7/16	1	7/16	5/8	1/4	2-1/8	3/8	1.1260	0.2559	SA202-9	0.31	0.8661	0.2362	SB202-9	0.29	PSD203
202-10	5/8												SA202-10				SB202-10		
203	17												SA203				SB203		
203-11	11/16												SA203-11				SB203-11		
SAPSD SBPSD 204	20	33.3	125	97	27	11	16	7	71.5		31	7.5	SA204	0.38	25	7	SB204	0.36	PSD204
204-12	3/4	1-5/16	4-15/16	3-13/16	1-1/16	7/16	5/8	9/32	2-13/16	3/8	1.2204	0.2953	SA204-12		0.9843	0.2756	SB204-12		
SAPSD SBPSD 205	25	36.5	130	100	29	11	16	7	67.5		31	7.5	SA205		27	7.5	SB205		
205-13	13/16												SA205-13				SB205-13		
205-14	7/8	1-7/16	5-1/8	3-15/16	1-1/8	7/16	5/8	9/32	2-21/32	3/8	1.2204	0.2953	SA205-14	0.50	1.0630	0.2953	SB205-14	0.48	PSD205
205-15	15/16												SA205-15				SB205-15		
205-16	1												SA205-16				SB205-16		
SAPSD SBPSD 206	30	42.9	156	119	33	14	21	8	79		35.7	9	SA206		30	8	SB206		
206-17	1-1/16												SA206-17				SB206-17		
206-18	1-1/8	1-11/16	6-5/32	4-22/32	1-5/16	9/16	13/16	5/16	3-1/8	1/2	1.4055	0.3543	SA206-18	0.83	1.1811	0.3150	SB206-18	0.76	PSD206
206-19	1-3/16												SA206-19				SB206-19		
206-20	1-1/4												SA206-20				SB206-20		
SAPSD SBPSD 207	35	47.6	165	127	35	14	21	9	90.5		38.9	9.5	SA207		32	8.5	SB207		
207-20	1-1/4												SA207-20	1.16			SB207-20	1.03	PSD207
207-21	1-5/16	1-7/8	6-1/2	5	1-3/8	9/16	13/16	11/32	3-9/16	1/2	1.5315	0.3740	SA207-21		1.2598	0.3346	SB207-21		
207-22	1-3/8												SA207-22				SB207-22		
207-23	1-7/16												SA207-23				SB207-23		

SAFN2 (SA2-Fitted) — Flange Unit (Light duty) — SBFN2 (SB2-Fitted)

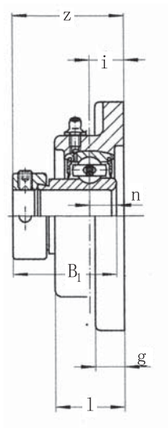

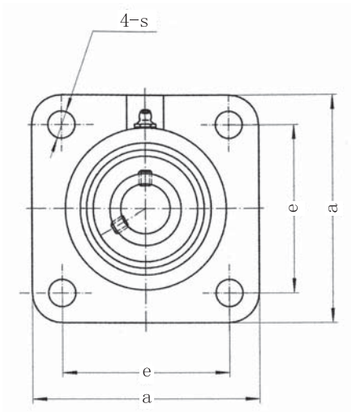

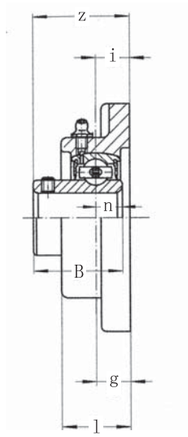

Unit No.		Dimensions mm in. d	a	e	i	g	s	l	Bolt Size mm inch	SAFN2 z	B_1	n	Bearing No.	Weight (kg)	SAFN2 z	B	n	Bearing No.	Weight (kg)	Housing No.
SAFN SBFN	201	12	76	54	11.4	9.5	11	18	M10	33.5	28.6	6.5	SA201G		27.4	22	6	SB201G		
	201-8	1/2											SA201-8G					SB201-8G		
	202	15											SA202G					SB202G		
	202-9	9/16	3	2-1/8	0.448	3/8	7/16	23/32	3/8	1.319	1.1260	0.2559	SA202-9G	0.40	1.079	0.8661	0.2362	SB202-9G	0.40	FN203
	202-10	5/8											SA202-10G					SB202-10G		
	203	17											SA203G					SB203G		
	203-11	11/16											SA203-11G					SB203-11G		
SAFN SBFN	204	20	86	63.5	12.6	11	11	20.5	M10	36.1	31	7.5	SA204G	0.64	30.6	25	7	SB204G	0.61	FN204
	204-12	3/4	3-3/8	2-1/2	0.495	7/16	7/16	13/16	5/16	1.421	1.2204	0.2953	SA204-12G		1.205	0.9843	0.2756	SB204-12G		
SAFN SBFN	205	25	95	70	12.3	11	13	20.5	M12	35.8	31	7.5	SA205G		31.8	27	7.5	SB205G		
	205-13	13/16											SA205-13G					SB205-13G		
	205-14	7/8	3-3/4	2-3/4	0.483	7/16	33/64	13/16	7/16	1.409	1.2204	0.2953	SA205-14G	0.78	1.252	1.0630	0.2953	SB205-14G	0.76	FN205
	205-15	15/16											SA205-15G					SB205-15G		
	205-16	1											SA205-16G					SB205-16G		
SAFN SBFN	206	30	108	82.5	12.1	13.5	13	24	M12	38.8	35.7	9	SA206G		34.1	30	8	SB206G		
	206-17	1-1/16											SA206-17G					SB206-17G		
	206-18	1-1/8	4-1/4	3-1/4	0.478	17/32	33/64	61/64	7/16	1.527	1.4055	0.3543	SA206-18G	1.16	1.342	1.1811	0.3150	SB206-18G	1.11	FN206
	206-19	1-3/16											SA206-19G					SB206-19G		
	206-20	1-1/4											SA206-20G					SB206-20G		
SAFN SBFN	207	35	117	92	14.6	15	14	26.5	M12	44.0	38.9	9.5	SA207G		38.1	32	8.5	SB207G		
	207-20	1-1/4											SA207-20G					SB207-20G		
	207-21	1-5/16	4-5/8	3-5/8	0.575	19/32	35/64	1-3/64	1/2	1.732	1.5315	0.3740	SA207-21G	1.54	1.500	1.2598	0.3346	SB207-21G	1.50	FN207
	207-22	1-3/8											SA207-22G					SB207-22G		
	207-23	1-7/16											SA207-23G					SB207-23G		
SAFN SBFN	208	40	130	101.5	15.5	16	14	28.5	M12	48.2	43.7	11	SA208G		40.5	34	9	SB208G		
	208-24	1-1/2	5/8	4	0.610	5/8	35/64	1-1/8	1/2	1.898	1.7205	0.4331	SA208-24G	2.09	1.594	1.3386	0.3543	SB208-24G	1.96	FN208
	208-25	1-9/16											SA208-25G					SB208-25G		
SAFN SBFN	209	45	136	105	13.8	16	16	28.5	M14	46.5	43.7	11	SA209G		44.8	41.2	10.2	SB209G		
	209-26	1-5/8											SA209-26G					SB209-26G		
	209-27	1-11/16	5-3/8	4-1/8	0.544	5/8	5/8	1-1/8	9/16	1.831	1.7205	0.4331	SA209-27G	2.27	1.764	1.6220	0.402	SB209-27G	2.20	FN209
	209-28	1-3/4											SA209-28G					SB209-28G		

SAFTN2 (SA-2-Fitted) — Flange Unit (Light duty) — SBFTN2 (SB-2-Fitted)

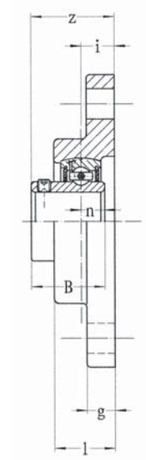

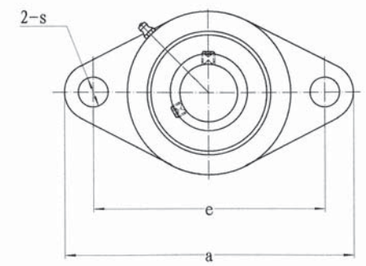

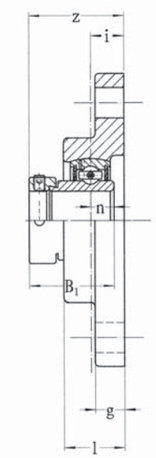

Unit No.		Dimensions mm in. d	a	e	i	g	l	s	Bolt Size mm inch	SAFTN2 z	B_1	n	Bearing No.	Weight (kg)	SBFTN2 z	B	n	Bearing No.	Weight (kg)	Housing No.
SAFTN SBFTN	201	12	98	76.2	11.4	9.5	18	11	M10	33.5	28.6	6.5	SA201G		27.4	22	6	SB201G		
	201-8	1/2											SA201-8G					SB201-8G		
	202	15											SA202G					SB202G		
	202-9	9/16	3-7/8	3	0.448	3/8	23/32	7/16	3/8	1.319	1.1260	0.2559	SA202-9G	0.29	1.079	0.8661	0.2362	SB202-9G	0.26	FTN203
	202-10	5/8											SA202-10G					SB202-10G		
	203	17											SA203G					SB203G		
	203-11	11/16											SA203-11G					SB203-11G		
SAFTN SBFTN	204	20	112	90	12.6	11	20.5	11	M10	36.1	31	7.5	SA204G	0.46	30.6	25	7	SB204G	0.43	FTN204
	204-12	3/4	4-13/32	3-17/32	0.495	7/16	13/16	7/16	5/16	1.421	1.2204	0.2953	SA204-12G		1.205	0.9843	0.2756	SB204-12G		
SAFTN SBFTN	205	25	124	99	12.3	11	20.5	13	M12	35.8	31	7.5	SA205G		31.8	27	7.5	SB205G		
	205-13	13/16											SA205-13G					SB205-13G		
	205-14	7/8	4-7/8	3-57/64	0.483	7/16	13/16	33/64	7/16	1.409	1.2204	0.2953	SA205-14G	0.56	1.252	1.0630	0.2953	SB205-14G	0.52	FTN205
	205-15	15/16											SA205-15G					SB205-15G		
	205-16	1											SA205-16G					SB205-16G		
SAFTN SBFTN	206	30	141	116.5	12.1	13	24	13	M12	38.8	35.7	9	SA206G		34.1	30	8	SB206G		
	206-17	1-1/16											SA206-17G					SB206-17G		
	206-18	1-1/8	5-9/16	4-19/32	0.478	33/64	61/64	33/64	7/16	1.527	1.4055	0.3543	SA206-18G	0.80	1.342	1.1811	0.3150	SB206-18G	0.75	FTN206
	206-19	1-3/16											SA206-19G					SB206-19G		
	206-20	1-1/4											SA206-20G					SB206-20G		
SAFTN SBFTN	207	35	155	130	14.6	15	26.5	14	M12	44	38.9	9.5	SA207G		38.1	32	8.5	SB207G		
	207-20	1-1/4											SA207-20G					SB207-20G		
	207-21	1-5/16	6-1/6	5-1/8	0.575	19/32	1-3/64	35/64	1/2	1.732	1.5315	0.3740	SA207-21G	1.18	1.500	1.2598	0.3346	SB207-21G	1.05	FTN207
	207-22	1-3/8											SA207-22G					SB207-22G		
	207-23	1-7/16											SA207-23G					SB207-23G		
SAFTN SBFTN	208	40	171	143.5	15.5	16	28.5	14	M12	48.2	43.7	11	SA208G		40.5	34	9	SB208G		
	208-24	1-1/2	6-3/4	5-21/32	0.610	5/8	1-1/8	35/64	1/2	1.898	1.7205	0.4331	SA208-24G	1.56	1.594	1.3386	0.3543	SB208-24G	1.43	FTN208
	208-25	1-9/16											SA208-25G					SB208-25G		
SAFTN SBFTN	209	45	179	148.5	13.8	16	28.5	16	M14	46.5	43.7	11	SA209G		44.8	41.2	10.2	SB209G		
	209-26	1-5/8											SA209-26G					SB209-26G		
	209-27	1-11/16	7-1/16	5-27/32	0.544	5/8	1-1/8	5/8	9/16	1.831	1.7205	0.4331	SA209-27G	1.74	1.764	1.6220	0.402	SB209-27G	1.66	FTN209
	209-28	1-3/4											SA209-28G					SB209-28G		

SACFTR (SA2-Fitted) — Flange Unit (Light duty) — SBCFTR (SB2-Fitted)

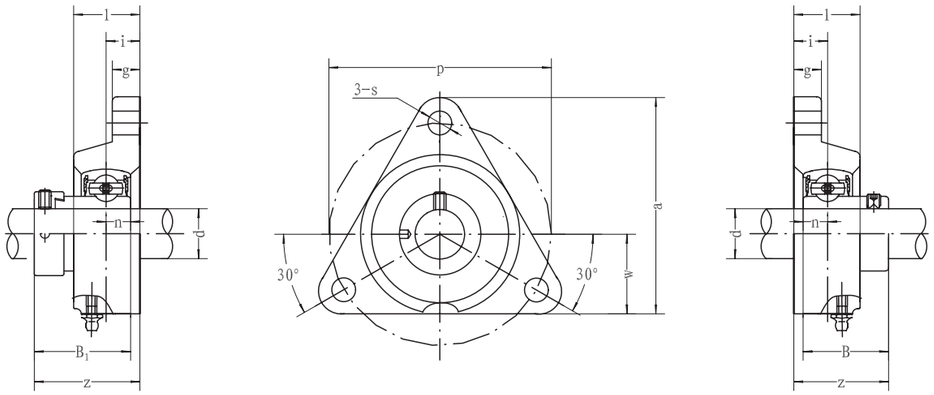

Unit No.	Dimensions mm in. d	a	p	w	g	i	l	s	Bolt Size mm inch	SACFTR2 z	B_1	n	Bearing No.	Weight (kg)	SBCFTR2 z	B	n	Bearing No.	Weight (kg)	Housing No.
SACFTR 201 SBCFTR	12	81	76.1	31	11	10	20	11.5	M10	32.1	28.6	6.5	SA201G	0.4	26.0	22	6	SB201G	0.38	CFTR203
202	15	3-3/16	3	1-7/32	7/16	25/64	25/32	29/64	3/8	1-17/64	1.1260	0.2559	SA202G		1-1/32	0.8661	0.236	SB202G		
203	17												SA203G					SB203G		
SACFTR 204 SBCFTR	20	92 3-5/8	89.5 3-17/32	35 1-3/8	11 7/16	10.5 13/32	20 25/32	11.5 29/64	M10 3/8	34 1-11/32	31 1.2204	7.5 0.2953	SA204G	0.56	28.5 1-1/8	25 0.9843	7 0.276	SB204G	0.53	CFTR204
SACFTR 205 SBCFTR	25	97 3-13/16	96 3-25/32	36 1-27/64	12 15/32	12.5 31/64	22 7/8	11.5 29/64	M10 3/8	36 1-27/64	31 1.2204	7.5 0.2953	SA205G	0.72	32 1-17/64	27 1.0630	7.5 0.295	SB205G	0.68	CFTR205
SACFTR 206 SBCFTR	30	117 4-39/64	116 4-9/16	44 1-47/64	12 15/32	13.3 17/32	24 15/16	11.5 29/64	M10 3/8	40 1-37/64	35.7 1.4055	9 0.3543	SA206G	0.98	35.3 1-25/64	30 1.1811	8 0.315	SB206G	0.93	CFTR206
SACFTR 207 SBCFTR	35	128 5-3/64	129.7 5-7/64	48 1-57/64	14 35/64	15.6 39/64	27 1-1/16	14 35/64	M12 1/2	45 1-49/64	38.9 1.5315	9.5 0.3740	SA207G	1.28	39.1 1-35/64	32 1.2598	8.5 0.335	SB207G	1.24	CFTR207
SACFTR 208 SBCFTR	40	137 5-25/64	140 5-33/64	51 2-1/64	16 5/8	18.3 23/32	30 1-3/16	14 35/64	M12 1/2	51 2-1/64	43.7 1.7205	11 0.433	SA208G	1.81	43.3 1-45/64	34 1.3386	9 0.354	SB208G	1.81	CFTR208
SACFTR 209 SBCFTR	45	150 5-29/32	160 6-19/64	55 2-11/64	16 5/8	19.2 3/4	33 1-19/64	14 35/64	M12 1/2	51.9 2-3/64	43.7 1.7205	11 0.433	SA209G	2.07	50.2 1-63/64	41.2 1.6220	10.2 0.402	SB209G	2.11	CFTR209
SACFTR 210 SBCFTR	50	150 2-29/32	160 6-19/64	55 2-11/64	16 5/8	19.2 3/4	33 1-19/64	14 35/64	M12 1/2	51.9 2-3/64	43.7 1.7205	11 0.433	SA210G	2.29	51.8 2-3/64	43.5 1.7126	10.9 0.429	SB210G	2.18	CFTR210

SALF2 (SA2-Fitted) — Flange Unit (Light duty) — SBLF2 (SB2-Fitted)

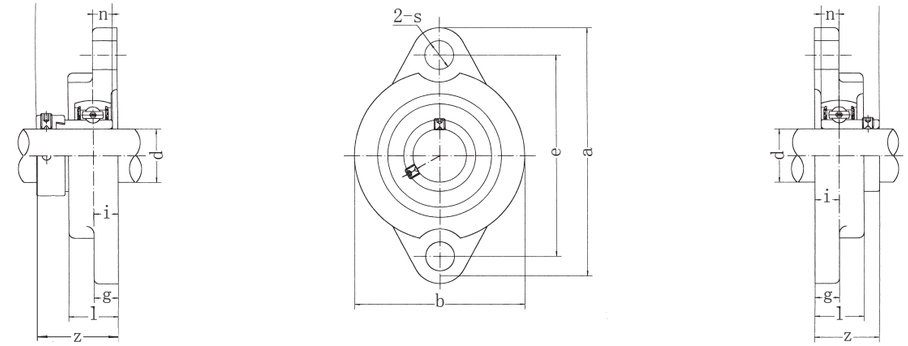

SALF SBLF

Unit No.	Dimensions mm in. d	a	e	b	i	s	g	l	Bolt Size mm inch	SALF z	B_1	n	Bearing No.	Weight (kg)	SBLF z	B	n	Bearing No.	Weight (kg)	Housing No.
SALF SBLF 201	12	81	63.5	56	9.5	8	9.5	18	M6	31.6	28.6	6.5	SA201	0.3	25.5	22	6	SB201	0.3	LF203
201-8	1/2	3-3/16	2-1/2	2-13/64	3/8	5/16	3/8	45/64	1/4	1-1/4	1.1260	0.2559	SA201-8		1	0.8661	0.2362	SB201-8		
202	15												SA202					SB202		
202-9	9/16												SA202-9					SB202-9		
202-10	5/8												SA202-10					SB202-10		
203	17												SA203					SB203		
203-11	11/16												SA203-11					SB203-11		
SALF SBLF 204	20	90	71.5	61	11	10	11	20	M8	34.5	31	7.5	SA204	0.4	29	25	7	SB204	0.3	LF204
204-12	3/4	3-35/64	2-13/16	2-13/32	7/16	25/64	7/16	25/32	5/16	1-23/64	1.2204	0.2953	SA204-12		1-9/64	0.9843	0.2756	SB204-12		
SALF SBLF 205	25	95	76	64	11	10	11	20	M8	34.5	31	7.5	SA205	0.5	30.5	27	7.5	SB205	0.4	LF205
205-13	13/16	3-3/4	2-63/64	2-33/64	7/16	25/64	7/16	25/32	5/16	1-23/64	1.2204	0.2953	SA205-13		1-13/64	1.0630	0.2953	SB205-13		
205-14	7/8												SA205-14					SB205-14		
205-15	15/16												SA205-15					SB205-15		
205-16	1												SA205-16					SB205-16		
SALF SBLF 206	30	113	90.5	76	12	12	12	22.5	M10	38.7	35.7	9	SA206	0.7	34	30	8	SB206	0.6	LF206
206-17	1-1/16	4-7/16	3-9/16	3	15/32	15/32	15/32	57/64	3/8	1-33/64	1.4055	0.3543	SA206-17		1-11/32	1.1811	0.3150	SB206-17		
206-18	1-1/8												SA206-18					SB206-18		
206-19	1-3/16												SA206-19					SB206-19		
206-20	1-1/4												SA206-20					SB206-20		
SALF SBLF 207	35	122	100	89	13	12	13	24	M10	42.4	38.9	9.5	SA207	0.9	36.5	32	8.5	SB207	0.8	LF207
207-20	1-1/4	4-13/16	3-15/16	3-1/2	33/64	15/32	33/64	61/64	3/8	1-43/64	1.5315	0.3740	SA207-20		1-7/16	1.2598	0.3346	SB207-20		
207-21	1-5/16												SA207-21					SB207-21		
207-22	1-3/8												SA207-22					SB207-22		
207-23	1-7/16												SA207-23					SB207-23		

SAPR2 (SA2-Fitted) — Rubber Mounted Units (Light duty) — SBPR2 (SB2-Fitted)

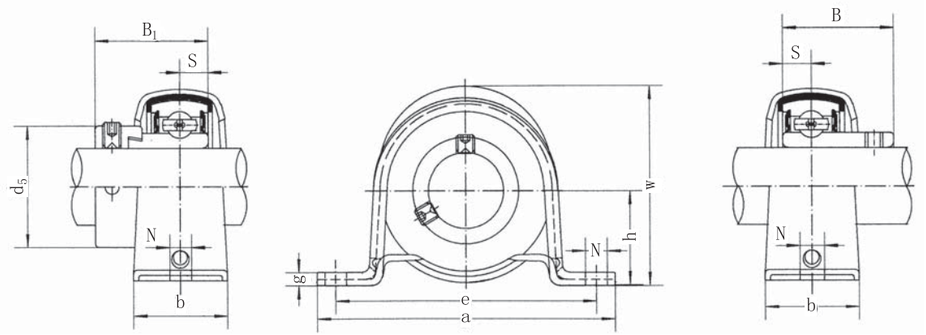

Unit No.		Dimensions mm / in.								SAR				SBR			Bolt Size mm / inch	Housing No.	Rubber Ring NO.	Weight (kg)
		d	h	a	e	b	N	g	w	B1	s	d5	Bearing No.	B	s	Bearing No.				
SAPR SBPR	201	12	25.4	98	76	32	9.5	3.2	50.5	28.6	6.5	28.6	SA 201	22	6	SB 201	M8	PP204	R-4	0.17
	201-8	1/2											201-8			201-8				
	202	15	1	3-55/64	2-63/64	1-17/64	3/8	1/8	1-63/64	1.1260	0.256	1-1/8	202	0.8661	0.236	202	5/16			
	202-10	5/8											202-10			202-10				
SAPR SBPR	204	20	28.6	108	86	32	11.5	4	56.6	31	7.5	33.3	SA 204	25	7	SB 204	M10	PP205	R-5	0.24
	204-12	3/4	1-1/8	4-1/4	3-25/64	1-17/64	29/64	5/32	2-15/64	1.2205	0.295	1-5/16	204-12	0.9843	0.275	204-12	3/8			
SAPR SBPR	205	25	33.3	117	95	38	11.5	4	66.3	31	7.5	38.1	SA 205	27	7.5	SB 205	M10	PP206	R-6	0.35
	205-14	7/8											205-14			205-14				
	205-15	15/16	1-5/16	4-39/64	3-47/64	1-1/2	29/64	5/32	2-39/64	1.2205	0.295	1-1/2	205-15	1.0630	0.295	205-15	3/8			
	205-16	1											205-16			205-16				
SAPR SBPR	206	30	39.7	129	106	42	11.5	4.6	78	35.7	9	44.5	206	30	8	206	M10	PP207	R-7	0.48
	206-17	1-1/16											SA 206-17			SB 206-17				
	206-18	1-1/8	1-9/16	5-5/64	4-11/64	1-21/32	29/64	3/16	3-5/64	1.4055	0.354	1-3/4	206-18	1.1811	0.315	206-18	3/8			
	206-19	1-3/16											206-19			206-19				
	206-20	1-1/4											206-20			206-20				

Note: "Snap-together" housings available upon request-add "ST" suffix.

RCSM2 (CSA2-Fitted) — Rubber Mounted Units (Light duty) — RCSMS2 (CSB2-Fitted)

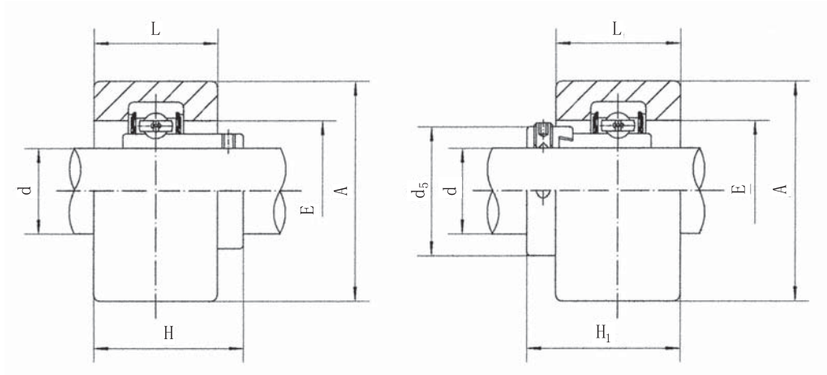

Unit No.		Dimensions mm / in.							Bearing No.		Rubber Ring NO.	Weight (kg)	
Locking collar Type	Set Screw Type	d	A	L	E	H1	H	d5	RCSM	RCSMS		RCSM	RCSMS
RCSM 201	RCSMS 201	12	64.3	25.4	34.9	34.9	29	28.6	CSA 201	CSB 201	RC-3	0.2	0.16
201-8	201-8	1/2							201-8	201-8			
202	202	15	2-17/32	1	1-3/8	1-3/8	1-9/64	1-1/8	202	202			
202-10	202-10	5/8							202-10	202-10			
RCSM 204	RCSMS 204	20	64.3	25.4	39.7	36.1	31	33.3	CSA 204	CSB 204	RC-4	0.24	0.22
204-12	204-12	3/4	2-17/32	1	1-9/16	1-27/64	1-7/32	1-5/16	204-12	204-12			
RCSM 205	RCSMS 205	25	64.3	25.4	45.2	36.1	32.5	38.1	CSA 205	CSB 205	RC-5	0.26	0.24
205-14	205-14	7/8							205-14	205-14			
205-15	205-15	15/16	2-17/32	1	1-25/32	1-27/64	1-9/32	1-1/2	205-15	205-15			
205-16	205-16	1							205-16	205-16			
RCSM 206	RCSMS 206	30	79.0	27.0	54.0	40.2	35.5	44.5	CSA 206	CSB 206	RC-6	0.36	0.32
206-17	206-17	1-1/16							206-17	206-17			
206-18	206-18	1-1/8	3-7/64	1-1/16	2-1/8	1-37/64	1-13/32	1-3/4	206-18	206-18			
206-19	206-19	1-3/16							206-19	206-19			

SAR2 (SA2-Fitted) — Rubber Mounted Units (Light duty) — SBR2 (SB2-Fitted)

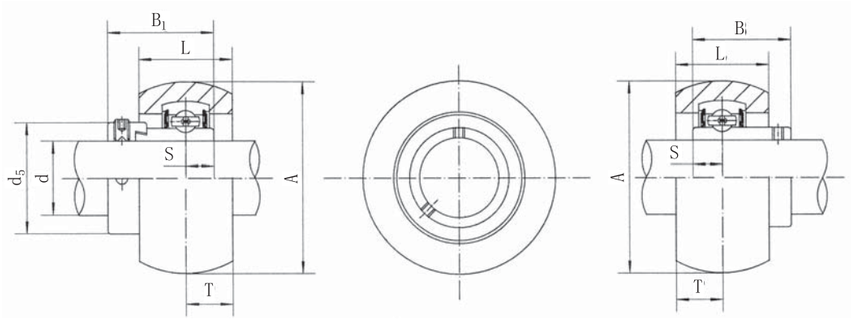

SAR SBR

Unit No.	Dimensions mm in. d	A	L	T	SAR B1	S	d5	Bearing No.	Weight (kg)	SBR B	S	Bearing No.	Weight (kg)	Rubber Ring NO.
SAR SBR 201	12	47.4	17.4	8.7	28.6	6.5	28.6	SA 201	0.16	22	6	SB 201	0.11	R-4
201-8	1/2	1-7/8	11/16	11/32	1.1260	0.2559	1-1/8	201-8		0.8661	0.2362	201-8		
202	15							202				202		
202-10	5/8							202-10				202-10		
SAR SBR 204	20	52.4	17.4	8.7	31	7.5	33.3	SA 204	0.17	25	7	SB 204	0.16	R-5
204-12	3/4	2-1/16	11/16	11/32	1.2205	0.2953	1-5/16	204-12		0.9843	0.2756	204-12		
SAR SBR 205	25	62.4	19.8	10.3	31	7.5	38.1	SA 205	0.22	27	7.5	SB 205	0.19	R-6
205-14	7/8	2-29/64	25/32	13/32	1.2205	0.2953	1-1/2	205-14		1.0630	0.2953	205-14		
205-15	15/16							205-15				205-15		
205-16	1							205-16				205-16		
SAR SBR 206	30	72.4	20.6	10.3	35.7	9	44.5	SA 206	0.36	30	8	SB 206	0.44	R-7
206-17	1-1/16	2-27/32	13/16	13/32	1.4055	0.3543	1-3/4	206-17		1.1811	0.3150	206-17		
206-18	1-1/8							206-18				206-18		
206-19	1-3/16							206-19				206-19		
206-20	1-1/4							206-20				206-20		

SAPP2 (SA2-Fitted) — Pressed Housing Pillow Blocks (Light-duty) — SBPP2 (SB2-Fitted)

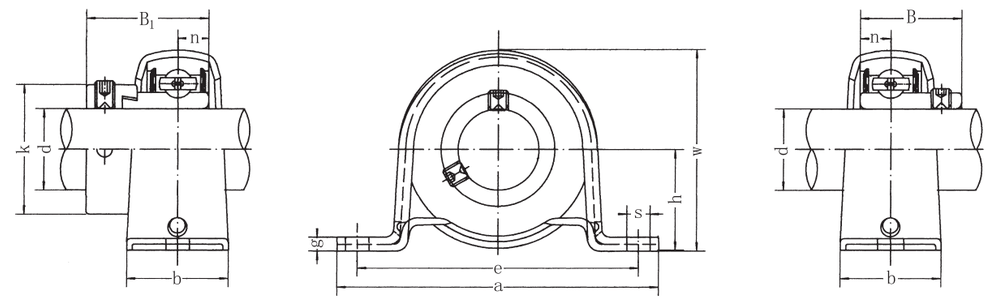

SAPP SBPP

Unit No.	Dimensions mm in. d	h	a	e	b	s	g	w	Bolt Size mm inch	SAPP B1	n	Bearing No.	Weight (kg)	SBPP B	n	Bearing No.	Weight (kg)	Housing No.
SAPP SBPP 201	12	22.2	86	68	25	9.5	3.2	43.8	M8	28.6	6.5	SA201	0.19	22	6	SB201	0.16	PP203
201-8	1/2	7/8	3-3/8	2-43/64	63/64	3/8	0.126	1-23/32	5/16	1.1260	0.2559	SA201-8		0.8661	0.2362	SB201-8		
202	15											SA202				SB202		
202-9	9/16											SA202-9				SB202-9		
202-10	5/8											SA202-10				SB202-10		
203	17											SA203				SB203		
203-11	11/16											SA203-11				SB203-11		
SAPP SBPP 204	20	25.4	98	76	32	9.5	3.2	50.5	M8	31	7.5	SA204	0.23	25	7	SB204	0.23	PP204
204-12	3/4	1	3-27/32	2-63/64	1-1/4	3/8	0.126	1-63/64	5/16	1.2204	0.2953	SA204-12		0.9843	0.2756	SB204-12		
SAPP SBPP 205	25	28.6	108	86	32	11.5	4	56.6	M10	31	7.5	SA205	0.32	27	7.5	SB205	0.28	PP205
205-13	13/16	1-1/8	4-1/4	3-25/64	1-1/4	29/64	0.157	2-15/64	3/8	1.2204	0.2953	SA205-13		1.0630	0.2953	SB205-13		
205-14	7/8											SA205-14				SB205-14		
205-15	15/16											SA205-15				SB205-15		
205-16	1											SA205-16				SB205-16		
SAPP SBPP 206	30	33.3	117	95	38	11.5	4	66.3	M10	35.7	9	SA206	0.50	30	8	SB206	0.47	PP206
206-17	1-1/16	1-5/16	4-39/64	3-47/64	1-1/2	29/64	0.157	2-39/64	3/8	1.4055	0.3543	SA206-17		1.1811	0.3150	SB206-17		
206-18	1-1/8											SA206-18				SB206-18		
206-19	1-3/16											SA206-19				SB206-19		
206-20	1-1/4											SA206-20				SB206-20		
SAPP SBPP 207	35	39.7	129	106	42	11.5	4.6	78	M10	38.9	9.5	SA207	0.71	32	8.5	SB207	0.57	PP207
207-20	1-1/4	1-9/16	5-5/64	4-5/32	1-21/32	29/64	0.181	3-1/8	3/8	1.5315	0.3740	SA207-20		1.2598	0.3346	SB207-20		
207-21	1-5/16											SA207-21				SB207-21		
207-22	1-3/8											SA207-22				SB207-22		
207-23	1-7/16											SA207-23				SB207-23		
SAPP SBPP 208	40	43.7	148	120	43	13	5	86.2	M12	43.7	11	SA208	0.91	34	9	SB208	0.78	PP208
208-24	1-1/2	1-23/32	5-53/64	4-47/64	1-11/16	33/64	0.197	3-25/64	7/16	1.7205	0.433	SA208-24		1.3386	0.354	SB208-24		
208-25	1-9/16											SA208-25				SB208-25		
SAPP SBPP 209	45	46.8	156	128	45	13	6	92.3	M12	43.7	11	SA209	1.09	41.2	10.2	SB209	1.02	PP209
209-26	1-5/8	1-27/32	6-9/64	5-3/64	1-25/32	33/64	0.236	3-41/64	7/16	1.7205	0.433	SA209-26		1.6220	0.402	SB209-26		
209-27	1-11/16											SA209-27				SB209-27		
209-28	1-3/4											SA209-28				SB209-28		

SAPF2 (SA2-Fitted) — Pressed Housing Flange Units (Light-duty) — SBPF2 (SB2-Fitted)

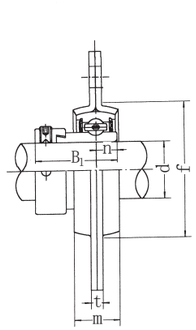

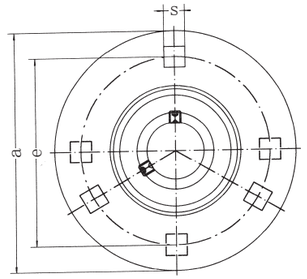

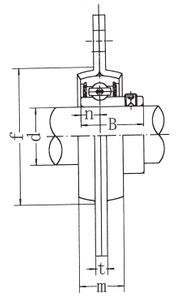

SAPF **SBPF**

Unit No.	Dimensions mm in. d	a	e	m	s[1]	t	f (min)	Bolt Size mm inch	SAPF B1	n	Bearing No.	Weight (kg)	SBPF B	n	Bearing No.	Weight (kg)	Housing No.
SAPF SBPF 201	12	81	63.5	14	7.1	4	49	M6	28.6	6.5	SA201		22	6	SB201		
201-8	1/2										SA201-8				SB201-8		
202	15										SA202				SB202		
202-9	9/16	3-3/16	2-1/2	9/16	9/32	0.157	1-59/64	1/4	1.1260	0.2559	SA202-9	0.3	0.8661	0.2362	SB202-9	0.27	PF203
202-10	5/8										SA202-10				SB202-10		
203	17										SA203				SB203		
203-11	11/16										SA203-11				SB203-11		
SAPF SBPF 204	20	90	71.5	16	9	4	56	M8	31	7.5	SA204		25	7	SB204		
204-12	3/4	3-35/64	2-13/16	5/8	23/64	0.157	2-13/64	5/16	1.2204	0.2953	SA204-12	0.33	0.9843	0.2756	SB204-12	0.33	PF204
SAPF SBPF 205	25	95	76	18	9	4	60	M8	31	7.5	SA205		27	7.5	SB205		
205-13	13/16										SA205-13				SB205-13		
205-14	7/8	3-3/4	2-63/64	23/32	23/64	0.157	2-23/64	5/16	1.2204	0.2953	SA205-14	0.42	1.0630	0.2953	SB205-14	0.38	PF205
205-15	15/16										SA205-15				SB205-15		
205-16	1										SA205-16				SB205-16		
SAPF SBPF 206	30	113	90.5	18	11	5.2	71	M10	35.7	9	SA206		30	8	SB206		
206-17	1-1/16										SA206-17				SB206-17		
206-18	1-1/8	4-7/16	3-9/16	23/32	7/16	0.205	2-51/64	3/8	1.4055	0.3543	SA206-18	0.65	1.1811	0.3150	SB206-18	0.62	PF206
206-19	1-3/16										SA206-19				SB206-19		
206-20	1-1/4										SA206-20				SB206-20		
SAPF SBPF 207	35	122	100	20	11	5.2	81	M10	38.9	9.5	SA207		32	8.5	SB207		
207-20	1-1/4										SA207-20				SB207-20		
207-21	1-5/16	4-13/16	3-15/16	25/32	7/16	0.205	3-3/16	3/8	1.5315	0.3740	SA207-21	0.9	1.2598	0.3346	SB207-21	0.82	PF207
207-22	1-3/8										SA207-22				SB207-22		
207-23	1-7/16										SA207-23				SB207-23		
SAPF SBPF 208	40	148	119	21	13.5	6.8	91	M12	43.7	11	SA208		34	9	SB208		
208-24	1-1/2	5-13/16	4-11/16	13/16	17/32	0.268	3-37/64	1/2	1.7205	0.4331	SA208-24	1.15	1.3386	0.3543	SB208-24	1.1	PF208
208-25	1-9/16										SA208-25				SB208-25		
SAPF SBPF 209	45	150	120.5	23	13.5	6.8	98	M12	43.7	11	SA209-26		41.2	10.2	SB209		
209-26	1-5/8										SA209-27	1.34			SB209-26	1.17	PF209
209-27	1-11/16	5-29/32	4-3/4	29/32	17/32	0.268	3-55/64	1/2	1.7205	0.433	SA209-28		1.6220	0.402	SB209-27		
209-28	1-3/4										SA210				SB209-28		
SAPF SBPF 210	50	157	127	25	13.5	8.0	102	M12	43.7	11	SA210-29		43.5	10.9	SB210		
210-29	1-13/16										SA210-30				SB210-29		
210-30	1-7/8	6-3/16	5	63/64	17/32	0.315	4-1/64	1/2	1.7205	0.433	SA210-31	1.62	1.7126	0.429	SB210-30	1.53	PF210
210-31	1-15/16										SA210-32				SB210-31		
210-32	2										SA211				SB210-32		
SAPF SBPF 211	55	168	138	26	13.5	8.0	113	M12	48.4	12	SA211-32		45.3	11.8	SB211		
211-32	2										SA211-33				SB211-32		
211-33	2-1/16	6-5/8	5-7/16	1-1/64	17/32	0.315	4-29/64	1/2	1.9055	0.472	SA211-34	2.03	1.7835	0.465	SB211-33	1.88	PF211
211-34	2-1/8										SA211-35				SB211-34		
211-35	2-3/16										SA212				SB211-35		
SAPF SBPF 212	60	177	148	28	13.5	8.0	122	M12	53.1	13.5	SA212-36		53.7	14.9	SB212		
212-36	2-1/4										SA212-37				SB212-36		
212-37	2-5/16	6-31/32	5-53/64	1-7/64	17/32	0.315	4-13/16	1/2	2.0906	0.531	SA212-38	2.45	2.1142	0.587	SB212-37	2.31	PF212
212-38	2-3/8										SA212-39				SB212-38		
212-39	2-7/16														SB212-39		

1)Note:PF208-212 with 4 bolt holes

SAPFL2 (SA2-Fitted) — Pressed Housing Flange Units (Light-duty) — SBPFL2 (SB2-Fitted)

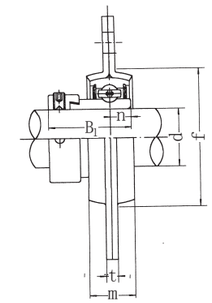

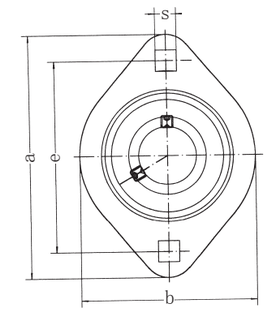

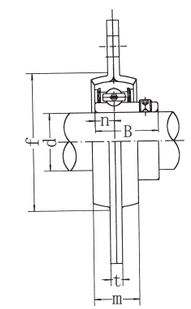

SAPFL **SBPFL**

Unit No.	Dimensions mm in. d	a	e	b	m	S	t	f (min)	Bolt Size mm inch	SAPFL B1	n	Bearing No.	Weight (kg)	SBPFL B	n	Bearing No.	Weight (kg)	Housing No.
SAPFL SBPFL 201	12	81	63.5	59	14	7.1	4	49	M6	28.6	6.5	SA201		22	6	SB201		
201-8	1/2											SA201-8				SB201-8		
202	15											SA202				SB202		
202-9	9/16	3-3/16	2-1/2	2-21/64	9/16	9/32	0.157	1-59/64	1/4	1.1260	0.2559	SA202-9	0.22	0.8661	0.2362	SB202-9	0.19	PFL203
202-10	5/8											SA202-10				SB202-10		
203	17											SA203				SB203		
203-11	11/16											SA203-11				SB203-11		
SAPFL SBPFL 204	20	90	71.5	67	16	9	4	56	M8	31	7.5			25	7			
204-12	3/4	3-35/64	2-13/16	2-41/64	5/8	23/64	0.157	2-13/64	5/16	1.2204	0.2953	SA204 SA204-12	0.24	0.9843	0.2756	SB204 SB204-12	0.24	PFL204
SAPFL SBPFL 205	25	95	76	71	18	9	4	60	M8	31	7.5			27	7.5			
205-13	13/16											SA205				SB205		
205-14	7/8	3-3/4	2-63/64	2-51/64	23/32	23/64	0.157	2-23/64	5/16	1.2204	0.2953	SA205-13 SA205-14	0.32	1.0630	0.2953	SB205-13 SB205-14	0.28	PFL205
205-15	15/16											SA205-15				SB205-15		
205-16	1											SA205-16				SB205-16		
SAPFL SBPFL 206	30	113	90.5	84	18	11	5.2	71	M10	35.7	9			30	8			
206-17	1-1/16											SA206				SB206		
206-18	1-1/8	4-7/16	3-9/16	3-5/16	23/32	7/16	0.205	2-51/64	3/8	1.4055	0.3543	SA206-17 SA206-18	0.41	1.1811	0.3150	SB206-17 SB206-18	0.38	PFL206
206-19	1-3/16											SA206-19				SB206-19		
206-20	1-1/4											SA206-20				SB206-20		
SAPFL SBPFL 207	35	122	100	94	20	11	5.2	81	M10	38.9	9.5			32	8.5			
207-20	1-1/4											SA207				SB207		
207-21	1-5/16	4-13/16	3-15/16	3-45/64	25/32	7/16	0.205	3-3/16	3/8	1.5315	0.3740	SA207-20 SA207-21	0.52	1.2598	0.3346	SB207-20 SB207-21	0.50	PFL207
207-22	1-3/8											SA207-22				SB207-22		
207-23	1-7/16											SA207-23				SB207-23		
SAPFL SBPFL 208	40	148	119	100	21	13.5	6.8	91	M12	43.7	11			34	9			
208-24	1-1/2	5-13/16	4-11/16	3-15/16	13/16	17/32	0.268	3-37/64	1/2	1.7205	0.4331	SA208 SA208-24	0.83	1.3386	0.3543	SB208 SB208-24	0.80	PFL208
208-25	1-9/16											SA208-25				SB208-25		

SAPFT2 (SA2-Fitted) — Pressed Housing Flange Units (Light-duty) — SBPFT2 (SB2-Fitted)

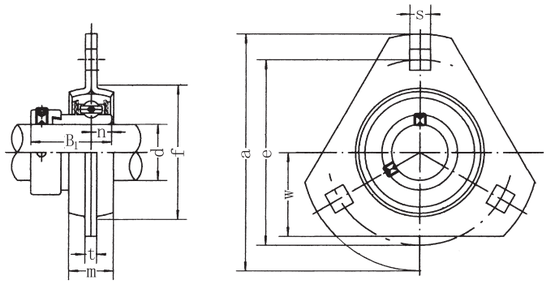

SAPFT

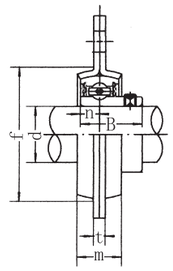

SBPFT

Unit No.	Dimensions mm in. d	a	e	w	m	s	t	f (min)	Bolt Size mm inch	SAPFT B1	n	Bearing No.	Weight (kg)	SBPFT B	n	Bearing No.	Weight (kg)	Housing No.
SAPFT 201	12	81	63.5	28.5	14	7.1	4	49	M6	28.6	6.5	SA201		22	6	SB201		
SBPFT 201-8	1/2											SA201-8				SB201-8		
202	15											SA202				SB202		
202-9	9/16	3-3/16	2-1/2	1-1/8	9/16	9/32	0.157	1-59/64	1/4	1.1260	0.2559	SA202-9	0.26	0.8661	0.2362	SB202-9	0.23	PFT203
202-10	5/8											SA202-10				SB202-10		
203	17											SA203				SB203		
203-11	11/16											SA203-11				SB203-11		
SAPFT 204	20	90	71.5	33	16	9	4	56	M8	31	7.5	SA204		25	7	SB204	0.28	PFT204
SBPFT 204-12	3/4	3-35/64	2-13/16	1-19/64	5/8	23/64	0.157	2-13/64	5/16	1.2204	0.2953	SA204-12	0.28	0.9843	0.2756	SB204-12		
SAPFT 205	25	95	76	35	18	9	4	60	M8	31	7.5	SA205		27	7.5	SB205		
SBPFT 205-13	13/16											SA205-13				SB205-13		
205-14	7/8	3-3/4	2-63/64	1-3/8	23/32	23/64	0.157	2-23/64	5/16	1.2204	0.2953	SA205-14	0.36	1.0630	0.2953	SB205-14	0.36	PFT205
205-15	15/16											SA205-15				SB205-15		
205-16	1											SA205-16				SB205-16		
SAPFT 206	30	113	90.5	40	18	11	5.2	71	M10	35.7	9	SA206		30	8	SB206		PFT206
SBPFT 206-17	1-1/16											SA206-17				SB206-17		
206-18	1-1/8	4-7/16	3-9/16	1-37/64	23/32	7/16	0.205	2-51/64	3/8	1.4055	0.3543	SA206-18	0.58	1.1811	0.3150	SB206-18	0.55	
206-19	1-3/16											SA206-19				SB206-19		
206-20	1-1/4											SA206-20				SB206-20		
SAPFT 207	35	122	100	44.5	20	11	5.2	81	M10	38.9	9.5	SA207		32	8.5	SB207		
SBPFT 207-20	1-1/4											SA207-20				SB207-20		
207-21	1-5/16	4-13/16	3-15/16	1-3/4	25/32	7/16	0.205	3-3/16	3/8	1.5315	0.3740	SA207-21	0.82	1.2598	0.3346	SB207-21	0.74	PFT207
207-22	1-3/8											SA207-22				SB207-22		
207-23	1-7/16											SA207-23				SB207-23		

Ball Bearings — UC2 (normal-duty)

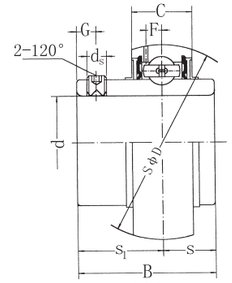

UC2

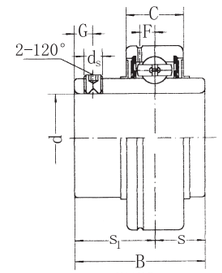

CUC2

SL TYPE SEAL

L3 TYPE SEAL

Suttix UNF: Inch sized set screws

Bearing No.	Dimensions mm in. d	D	B	C	S	S1	G	ds	F	Dynamic load ratings N	Static load ratings N	Weight (kg)
UCS201	12	40	27.4	14	11.5	15.9	4	m5x0.8	3.7			0.12
UCS201-8	1/2											0.11
UCS202	15											0.11
UCS202-9	9/16	1.5748	1.0787	0.5512	0.4528	0.626	0.157	10#-32	0.146	9600	4600	0.11
UCS202-10	5/8											0.11
UCS203	17											0.10
UCS203-11	11/16											0.10
UC201	12	47	31	17	12.7	18.3	4.8	M6 x 1	3.7			0.20
UC201-8	1/2											0.19
UC202	15											0.19
UC202-9	9/16	1.8504	1.2205	0.6693	0.500	0.720	0.189	1/4-28UNF	0.146	12800	6650	0.19
UC202-10	5/8											0.19
UC203	17											0.18
UC203-11	11/16											0.17
UC204	20	47	31	17	12.7	18.3	4.8	M6 x 1	3.7	12800	6650	0.16
UC204-12	3/4	1.8504	1.2205	0.6693	0.500	0.720	0.189	1/4-28UNF	0.146			0.16
UC205	25	52	34.1	17	14.3	19.8	5	M6 x1	3.9			0.20
UC205-13	13/16											0.24
UC205-14	7/8	2.0472	1.3425	0.6693	0.563	0.780	0.197	1/4-28UNF	0.154	14000	7850	0.23
UC205-15	15/16											0.21
UC205-16	1											0.20
UC206	30	62	38.1	19	15.9	22.2	5	M6 x1	5.0			0.32
UC206-17	1-1/16											0.33
UC206-18	1-1/8	2.4409	1.5000	0.7480	0.626	0.874	0.197	1/4-28UNF	0.197	19500	11300	0.34
UC206-19	1-3/16											0.32
UC206-20	1-1/4											0.31
UC207	35	72	42.9	20	17.5	25.4	7	M8x1	5.7			0.48
UC207-20	1-1/4											0.54
UC207-21	1-5/16	2.8346	1.6890	0.7874	0.689	1.000	0.276	5/16-24UNF	0.224	25700	15300	0.51
UC207-22	1-3/8											0.48
UC207-23	1-7/16											0.45
UC208	40	80	49.2	21	19	30.2	8	M8x1	6.2			0.64
UC208-24	1-1/2	3.1496	1.9370	0.8268	0.748	1.189	0.315	5/16-24UNF	0.244	29500	18100	0.68
UC208-25	1-9/16											0.65
UC209	45	85	49.2	22	19	30.2	8	M8x1	6.4			0.68
UC209-26	1-5/8											0.78
UC209-27	1-11/16	3.3465	1.9370	0.8661	0.748	1.189	0.315	5/16-24UNF	0.252	31600	20600	0.74
UC209-28	1-3/4											0.70
UC210	50	90	51.6	24	19	32.6	10	M10x1	6.5			0.80
UC210-29	1-13/16											0.92
UC210-30	1-7/8	3.5433	2.0315	0.9449	0.748	1.283	0.394	3/8-24UNF	0.256	35000	23200	0.87
UC210-31	1-15/16											0.82
UC210-32	2											0.78
UC211	55	100	55.6	25	22.2	33.4	10	M10x1	7.0			1.11
UC211-32	2											1.26
UC211-33	2-1/16	3.9370	2.1890	0.9843	0.874	1.315	0.394	3/8-24UNF	0.276	43500	29200	1.20
UC211-34	2-1/8											1.15
UC211-35	2-3/16											1.09
UC212	60	110	65.1	27	25.4	39.7	10	M10x1	7.6			1.54
UC212-36	2-1/4											1.67
UC212-37	2-5/16	4.3307	2.5630	1.0630	1.000	1.563	0.394	3/8-24UNF	0.299	477000	32900	1.59
UC212-38	2-3/8											1.52
UC212-39	2-7/16											1.45
UC213	65	120	65.1	28	25.4	39.7	10	M10x1	8.5			1.85
UC213--40	2-1/2	4.3307	2.5630	1.1024	1.000	1.563	0.394	3/8-24UNF	0.335	57500	40000	1.94
UC213-41	2-9/16											1.85
UC214	70	125	74.6	29	30.2	44.4	12	M12x1.5	8.9			2.05
UC214-42	2-5/8											2.26
UC214-43	2-11/16	4.9213	2.9370	1.1417	1.189	1.748	0.472	7/16-20UNF	0.350	60800	45000	2.16
UC214-44	2-3/4											2.06
UC215	75	130	77.8	30	33.3	44.5	12	M12x1.5	9.2			2.21
UC215-45	2-13/16											2.46
UC215-46	2-7/8	5.1181	3.0630	1.1811	1.311	1.752	0.472	7/16-20UNF	0.362	66000	49500	2.35
UC215-47	2-15/16											2.24
UC215-48	3											2.12
UC216	80	140	82.6	32	33.3	49.3	12	M12x1.5	9.5			2.80
UC216-49	3-1/16											2.98
UC216-50	3-1/8	5.5118	3.2520	1.2598	1.311	1.9409	0.472	7/16-20UNF	0.374	71500	54200	2.85
UC216-51	3-3/16											2.72
UC217	85	150	85.7	34	34.1	51.6	12	M12x1.5	10.2			3.46
UC217-52	3-1/4											3.68
UC217-53	3-5/16	5.9055	3.3740	1.3386	1.343	2.031	0.472	7/16-20UNF	0.402	83500	64000	3.54
UC217-55	3-7/16											3.25
UC218	90	160	96	36	39.7	56.3	12	M12x1.5	11.2			4.36
UC218-56	3-1/2	6.2992	3.7795	1.4173	1.5630	2.217	0.472	1/2-20UNF	0.441	96000	71500	4.47

HC2 (Normal-duty)

Ball Bearings
(with eccentric locking collar)

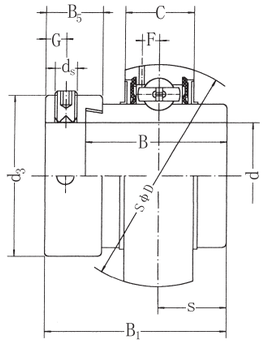

SL TYPE SEAL

L3 TYPE SEAL

Suffix UNF: Inch sized set screws

Bearing No.	Dimensions mm in. d	D	B1	B	C	S	d5	G	B5	d3	F	Dynamic load ratings N	Static load ratings N	Weight (kg)
HC201	12	47	43.7	34.2	17	17.1	M6x1	4.8	13.5	33.3	3.7	12800	6650	0.29
HC201-8	1/2	1.8504	1.720	1.3465	0.6693	0.673	1/4-28UNF	0.189	0.531	1.311	0.146			0.29
HC202	15											12800	6650	0.27
HC202-9	9/16													0.26
HC202-10	5/8													0.26
HC203	17											12800	6650	0.25
HC203-11	11/16													0.25
HC204	20	47	43.7	34.2	17	17.1	M6 x 1	4.8	13.5	33.3	3.7	12800	6650	0.23
HC204-12	3/4	1.8504	1.720	1.3465	0.6693	0.673	1/4-28UNF	0.189	0.531	1.311	0.146			0.23
HC205	25	52	44.4	34.9	17	17.5	M6 x 1	4.8	13.5	38.1	3.9	14000	7850	0.27
HC205-13	13/16													0.32
HC205-14	7/8	2.0472	1.748	1.3740	0.6693	0.689	1/4 -28UNF	0.189	0.531	1.500	0.154			0.31
HC205-15	15/16													0.29
HC205-16	1													0.27
HC206	30	62	48.4	36.5	19	18.3	M8 x 1	6	15.9	44.5	5.0	19510	11300	0.45
HC206-17	1-1/16													0.50
HC206-18	1-1/8	2.4409	1.906	1.4370	0.7480	0.720	5/16-24UNF	0.236	0.626	1.752	0.197			0.47
HC206-19	1-3/16													0.45
HC206-20	1-1/4													0.42
HC207	35	72	51.1	37.6	20	18.8	M8 x 1	6.8	17.5	55.6	5.7	25700	15300	0.60
HC207-20	1-1/4													0.67
HC207-21	1-5/16	2.8346	2.012	1.4803	0.7874	0.740	5/16-24UNF	0.268	0.689	2.189	0.224			0.63
HC207-22	1-3/8													0.60
HC207-23	1-7/16													0.57
HC208	40	80	56.3	42.8	21	21.4	M8 x 1	6.8	18.3	60.3	6.2	29500	18100	0.79
HC208-24	1-1/2	3.1496	2.217	1.6850	0.8268	0.843	5/16-24UNF	0.268	0.720	2.374	0.244			0.84
HC208-25	1-9/16													0.80
HC209	45	85	56.3	42.8	22	21.4	M8 x 1	6.8	18.3	63.5	6.4	31600	20600	0.85
HC209-26	1-5/8													0.96
HC209-27	1-11/16	3.3465	2.217	1.6850	0.8661	0.843	5/16-24UNF	0.268	0.720	2.5000	0.252			0.91
HC209-28	1-3/4													0.87
HC210	50	90	62.7	49.2	24	24.6	M8 x 1	6.8	18.3	69.9	6.5	35000	23200	0.99
HC210-29	1-13/16													1.14
HC210-30	1-7/8	3.5433	2.469	1.9370	0.9449	0.969	5/16-24UNF	0.268	0.720	2.752	0.256			1.08
HC210-31	1-15/16													1.02
HC210-32	2													0.96
HC211	55	100	71.4	55.5	25	27.8	M10 x 1	8	20.7	76.2	7.0	43500	29200	1.32
HC211-32	2													1.52
HC211-33	2-1/16	3.9370	2.811	2.1850	0.9843	1.094	3/8-24UNF	0.315	0.815	3.000	0.276			1.44
HC211-34	2-1/8													1.37
HC211-35	2-3/16													1.29
HC212	60	110	77.8	61.9	27	31	M10 x 1	8	22.3	84.2	7.6	47700	32900	1.88
HC212-36	2-1/4													2.04
HC212-37	2-5/16	4.3307	3.063	2.4370	1.0630	1.220	3/8-24UNF	0.315	0.878	3.315	0.299			1.95
HC212-38	2-3/8													1.90
HC212-39	2-7/16													1.77
HC213	65	120	85.7	68.6	28	34.1	M10 x 1	8.5	23.5	86	8.5	57500	40000	2.41
HC213-40	2-1/2	4.7244	3.374	2.7008	1.1024	1.343	3/8-24UNF	0.335	0.925	3.386	0.335			2.51
HC213-41	2-9/16													2.40
HC214	70	125	85.7	68.6	29	34.1	M10 x 1	8.5	23.5	90	8.9	60800	45000	2.55
HC214-42	2-3/8													2.79
HC214-43	2-11/16	4.9213	3.374	2.7008	1.1417	1.343	3/8-24UNF	0.335	0.925	3.543	0.350			2.68
HC214-44	2-3/4													2.56
HC215	75	130	92.1	75	30	37.3	M10 x 1	8.5	23.5	102	9.2	66000	49500	2.84
HC215-45	2-13/16													3.14
HC215-46	2-7/8	5.1181	3.626	2.9528	1.1811	1.469	3/8-24UNF	0.335	0.925	4.016	0.362			3.01
HC215-47	2-15/16													2.88
HC215-48	3													2.74

Ball Bearings
(with adapter mounted)

UK2 (normal-duty)

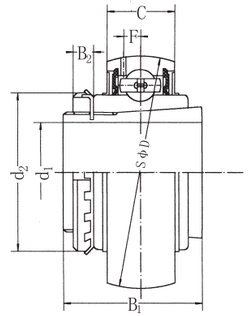

UK2+H,HA,HS,HE23

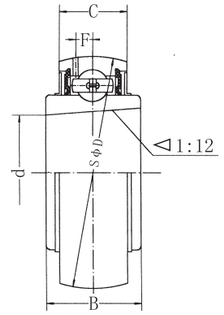

UK2

SL TYPE SEAL

L3 TYPE SEAL

Bearing No.	Dimensions mm in. d	D	B	C	d1	B1	B2	d2	F	Dynamic load ratings N	Static load ratings N	Weight (kg)
UK205;H2305	25	52	23	17	20	35	8	38	3.9	14000	7850	0.25
UK205;HE2305	0.9843	2.0472	0.9055	0.6693	3/4	1.378	0.315	1.496	0.154			
UK206;H2306	30	62	26	19	25	38	8	45	5.0	19500	11300	0.36
UK206;HS2306												
UK206;HE2306	1.1811	2.4409	1.0236	0.7480	1	1.496	0.315	1.772	0.197			
UK207;H2307	35	72	29	20	30	43	9	52	5.7	25700	15300	0.57
UK207;HS2307	1.3780	2.8346	1.1417	0.7874	1-1/8	1.693	0.354	2.047	0.224			
UK208;H2308	40	80	31	21	35	46	10	58	6.2	29500	18100	0.74
UK208;HE2308					1-1/4							
UK208;HS2308	1.5748	3.1496	1.2205	0.8268	1-3/8	1.811	0.394	2.283	0.244			
UK209;H2309	45	85	31	22	40	50	11	65	6.4	31600	20600	0.83
UK209;HA2309					1-7/16							
UK209;HE2309					1-1/2							
UK209;HS2309	1.7717	3.3465	1.2205	0.8661	1-5/8	1.969	0.433	2.559	0.252			
UK210;H2310	50	90	32	24	45	55	12	70	6.5	35000	23200	0.97
UK210;HS2310					1-5/8							
UK210;HA2310					1-11/16							
UK210;HE2310	1.9685	3.5433	1.2598	0.9449	1-3/4	2.165	0.472	2.756	0.256			
UK211;H2311	55	100	35	25	50	59	12	75	7.0	43500	29200	1.26
UK211;HS2311					1-7/8							
UK211;HA2311					1-15/16							
UK211;HE2311	2.1654	3.9370	1.3780	0.9843	2	2.323	0.472	2.953	0.276			
UK212;H2312	60	110	38	27	55	62	13	80	7.6	47700	32900	1.59
UK212;HS2312	2.3622	4.3307	1.4961	1.0630	2-1/8	2.441	0.512	3.150	0.299			
UK213;H2313	65	120	40	28	60	65	14	85	8.5	57500	40000	1.76
UK213;HA2313					2-3/16							
UK213;HE2313					2-1/4							
UK213;HS2313	2.5591	4.7244	1.5748	1.1024	2-3/8	2.559	0.551	3.346	0.335			
UK215;H2315	75	130	44	30	65	73	15	98	9.2	66000	49500	2.32
UK215;HA2315					2-7/16							
UK215;HE2315	2.9528	5.1181	1.7323	1.1811	2-1/2	2.874	0.591	3.858	0.362			
UK216;H2316	80	140	45	32	70	78	17	105	9.5	71500	54200	3.06
UK216;HA2316					2-11/16							
UK216;HE2316	3.1496	5.5118	1.7717	1.2598	2-3/4	3.071	0.669	4.134	0.374			
UK217;H2317	85	150	46	34	75	82	18	110	10.2	83500	64000	3.88
UK217;HA2317					2-15/16							
UK217;HE2317	3.3465	5.9055	1.8110	1.3386	3	3.228	0.709	4.331	0.402			
UK218;H2318	90	160	47	36	80	86	18	120	11.2	96000	71500	4.74
UK218;HA2318	3.5433	6.2992	1.8504	1.4173	3-3/16	3.386	0.709	4.724	0.441			

UCX(medium-duty)

Ball Bearings

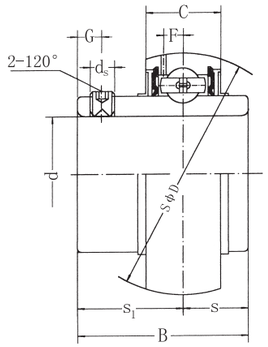

SL TYPE SEAL

L3 TYPE SEAL

Suffix UNF: Inch sized set screws

Bearing No.	Dimensions mm / in.									Dynamic load ratings N	Static load ratings N	Weight (kg)
	d	D	B	C	S	S_1	G	d_s	F			
UCX05	25	62	38.1	19	15.9	22.2	5	M6x1	5.0	19500	11300	0.39
UCX05-13	13/16	2.4409	1.5000	0.7480	0.626	0.874	0.197	1/4-28UNF	0.197			
UCX05-14	7/8											
UCX05-15	15/16											
UCX05-16	1											
UCX06	30	72	42.9	20	17.5	25.4	7	M8x1	5.7	25700	15300	0.68
UCX06-17	1-1/16	2.8346	1.6890	0.7874	0.689	1.000	0.276	5/16-24UNF	0.224			
UCX06-18	1-1/8											
UCX06-19	1-3/16											
UCX07	35	80	49.2	21	19	30.2	8	M8x1	6.2	29500	18100	0.82
UCX07-21	1-5/16	3.1496	1.9370	0.8268	0.748	1.189	0.315	5/16-24UNF	0.244			
UCX07-22	1-3/8											
UCX07-23	1-7/16											
UCX08	40	85	49.2	22	19	30.2	8	M8x1	6.4	31600	20600	0.93
UCX08-24	1-1/2	3.3465	1.9370	0.8661	0.748	1.189	0.315	5/16-24UNF	0.252			
UCX08-25	1-9/16											
UCX09	45	90	51.6	24	19	32.6	10	M10x1	6.5	35000	23200	1.00
UCX09-26	1-5/8	3.5433	2.0315	0.9449	0.748	1.283	0.394	3/8-24UNF	0.256			
UCX09-27	1-11/16											
UCX09-28	1-3/4											
UCX10	50	100	55.6	25	22.2	33.4	10	M10x1	7.0	43500	29200	1.35
UCX10-30	1-7/8	3.9370	2.1890	0.9843	0.874	1.315	0.394	3/8-24UNF	0.276			
UCX10-31	1-15/16											
UCX11	55	110	65.1	27	25.4	39.7	10	M10x1	7.6	47700	32900	1.90
UCX11-33	2-1/16	4.3307	2.5630	1.0630	1.000	1.563	0.394	3/8-24UNF	0.299			
UCX11-34	2-1/8											
UCX11-35	2-3/16											
UCX12	60	120	65.1	28	25.4	39.7	10	M10x1	8.5	57500	40000	2.27
UCX12-38	2-3/8	4.3307	2.5630	1.1024	1.000	1.563	0.394	3/8 -24UNF	0.335			
UCX12-39	2-7/16											
UCX13	65	125	74.6	29	30.2	44.4	12	M12x1.5	8.9	60800	45000	2.45
UCX13—40	2-1/2	4.9213	2.9370	1.1417	1.189	1.748	0.472	1/2-20UNF	0.350			
UCX13-41	2-9/16											
UCX14	70	130	77.8	30	33.3	44.5	12	M12x1.5	9.2	66000	49500	2.47
UCX14-42	2-3/8	5.1181	3.0630	1.1811	1.311	1.752	0.472	1/2-20UNF	0.362			
UCX14-43	2-11/16											
UCX14-44	2-3/4											
UCX15	75	140	82.6	32	33.3	49.3	12	M12x1.5	9.5	71500	54200	3.11
UCX15-45	2-13/16	5.5118	3.2520	1.2598	1.311	1.9409	0.472	1/2-20UNF	0.374			
UCX15-46	2-7/8											
UCX15-47	2-15/16											
UCX15-48	3											
UCX16	80	150	85.7	34	34.1	51.6	12	M12x1.5	10.2	83500	64600	3.79
UCX16-49	3-1/16	5.9055	3.3740	1.3386	1.343	2.031	0.472	1/2-20UNF	0.402			
UCX16-50	3-1/8											
UCX16-51	3-3/16											
UCX17	85	160	96	36	39.7	56.3	12	M12x1.5	11.2	96000	71500	4.82
UCX17-53	3-5/16	6.2992	3.7795	1.4173	1.5630	2.217	0.472	1/2-20UNF	0.441			
UCX17-55	3-7/16											
UCX18	90	170	104.0	39	42.9	61.1	16	M14x1.5	12.5	109000	82000	5.51
UCX18-56	3-1/2	6.6929	4.0945	1.5354	1.689	2.406	0.630	9/16-18UNF	0.492			5.63
UCX20	100	190	117.5	43	49.2	68.3	18	M16x1.5	13.7	133000	105000	8.56
UCX20-64	3-1/2	6.6929	4.0945	1.5354	1.689	2.689	0.630	5/8-18UNF	0.539			8.33

Ball Bearings
(with adapter mounted)

UKX(Medium-duty)

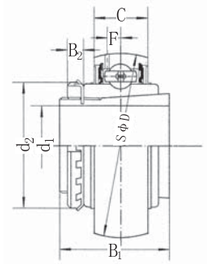

UKX;H,HA,HS,HE23

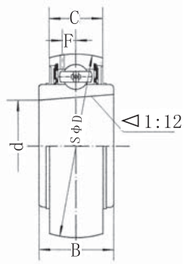

UKX

SL TYPE SEAL

L3 TYPE SEAL

Unit No.	Dimensions mm / in.									Dynamic load ratings N	Static load ratings N	Weight (kg)
	d	D	B	C	d_1	B_1	B_2	d_2	F			
UKX05;H2305	25	62	26	19	20	35	8	38	5.0	19500	11300	0.37
UKX05;HE2305	0.9845	2.4409	1.0236	0.7480	3/4	1.378	0.315	1.496	0.197			
UKX06;H2306	30	72	29	20	25	38	8	45	5.7	25700	15300	0.59
UKX06;HS2306	1.1811	2.8346	1.1417	0.7874	7/8	1.496	0.315	1.771	0.244			
UKX06;HE2306					1							
UKX07;H2307	35	80	31	21	30	43	9	52	6.2	29500	18100	0.75
UKX07;HS2308	1.3780	3.1496	1.2205	0.8268	1-1/8	1.693	0.354	2.047	0.244			
UKX08;H2308	40	85	31	22	35	46	10	58	6.4	31600	20600	0.86
UKX08;HE2308	1.5748	3.3465	1.2205	8.661	1-1/4	1.811	0.394	2.284	0.252			
UKX09;HS2308					1-3/8							
UKX09;H2309	45	90	32	24	40	50	11	65	6.5	35000	23200	0.96
UKX09;HA2309					1-7/16							
UKX09;HE2309	1.7717	3.5433	1.2598	0.9449	1/12	1.969	0.433	2.559	0.256			
UKX09;HS2309					1-5/8							
UKX10;H2310	50	100	35	25	45	55	12	70	7.0	43500	29200	1.34
UKX10;HS2310					1-5/8							
UKX11;HA2310	1.9685	3.9370	1.3780	0.6843	1-11/16	2.165	0.472	2.756	0.726			
UKX11;HE2310					1-3/4							
UKX11;H2311	55	110	38	27	50	59	12	75	7.6	47700	32900	1.67
UKX11;HS2311					1-7/8							
UKX11;HA2311	2.1654	4.3307	1.496	1.0630	1-15/16	2.323	0.472	2.953	0.299			
UKX11;HE2311					2							
UKX12;H2312	60	120	40	28	55	62	13	80	8.5	57500	40000	1.84
UKX12;HS2312	2.3622	4.7244	1.5748	1.1024	2-1/8	2.441	0.512	3.150	0.335			
UKX13;H2313	65	125	40	29	60	65	14	85	8.9	60800	45000	2.15
UKX13;HA2313					2-3/16							
UKX13;HE2313	2.5591	4.9213	1.5748	1.1417	2-1/4	2.559	0.551	3.346	0.350			
UKX13;HS2313					2-3/8							
UKX15;HS2315	75	140	45	32	65	73	15	98	9.5	71500	54200	3.05
UKX15;HA2315	2.9528	5.5118	1.7717	1.2598	2-7/16	2.874	0.591	3.858	0.374			
UKX15;HS2315					2-1/2							
UKX16;H2316	80	150	46	34	70	78	17	105	10.2	83500	64000	3.95
UKX16;HA2316	3.1496	0.9055	1.811	1.3386	2-11/16	3.071	0.669	4.134	0.402			
UKX16;HS2316					2-3/4							
UKX17;H2317	85	160	47	36	75	82	18	110	11.2	96000	71500	4.83
UKX17;HA2317	3.3465	6.2992	1.8504	1.4173	2-15/16	3.228	0.709	4.331	0.441			
UKX17;HE2317					3							
UKX18;H2320	90	170	50	39	80	86	18	120	12.5	109000	82000	5.45
UKX18;HA2320	3.5433	6.6929	1.9685	1.5354	3-3/16	3.386	0.709	4.724	0.492			
UKX20;H2320	100	190	54	43	90	97	20	130	13.7	133000	105000	7.51
UKX20;HA2320	3.9370	7.4803	2.1260	1.6929	3-17/32	3.8189	0.7874	5.1181	0.539			

UC3 Heavy-duty)

Ball Bearings

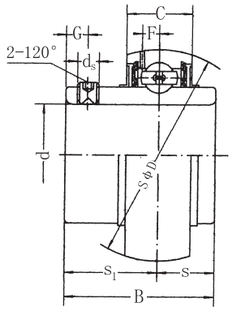

SL TYPE SEAL

L3 TYPE SEAL

Unit No.	Dimensions mm in.									Dynamic load ratings N	Static load ratings N	Weight (kg)
	d	D	B	C	S	S_1	G	d_s	F			
UC305	25	62	38	20	15	23	6	M6x1	5.4			0.35
UC305-13	13/16											0.40
UC305-14	7/8	2.4409	1.4961	0.7874	0.591	0.906	0.236	1/4-28UNF	0.213	22400	11500	0.38
UC305-15	15/16											0.36
UC305-16	1											0.35
UC306	30	72	43	23	17	26	6	M6X1	5.7			0.56
UC306-17	1-1/16											0.61
UC306-18	1-1/8	2.8346	1.6929	0.9055	0.669	1.024	0.236	1/4-28UNF	0.225	26700	15000	0.58
UC306-19	1-3/16											0.56
UC307	35	80	48	25	19	29	8	M8X1	6.2			0.71
UC307-20	1-1/4											0.77
UC307-21	1-5/16	3.1496	1.8898	0.9843	0.748	1.142	0.315	5/16-24UNF	0.224	33500	19100	0.74
UC307-22	1-3/8											0.71
UC307-23	1-7/16											0.68
UC308	40	90	52	27	19	33	10	M10X1	7.0			0.96
UC308-24	1-1/2	3.5433	2.0472	1.0630	0.748	1.299	0.394	3/8-24UNF	0.276	40500	24000	1.01
UC308-25	1-9/16											0.97
UC309	45	100	57	30	22	35	10	M10X1	7.8			1.28
UC309-26	1-5/8											1.39
UC309-27	1-11/16	3.9370	2.2441	1.1811	0.866	1.378	0.394	3/8-24UNF	0.307	52800	31800	1.35
UC309-28	1-3/4											1.30
UC310	50	110	61	32	22	39	12	M12X1.5	8.5			1.65
UC310-29	1-13/16											1.97
UC310-30	1-7/8	4.3307	2.4016	1.2598	0.866	1.535	0.472	1/2-20UNF	0.335	61800	37900	1.74
UC310-31	1-15/16											1.68
UC311	55	120	66	34	25	41	12	M12X1.5	9.2			2.07
UC311-32	2											2.25
UC311-33	2-1/16	4.7244	2.5984	1.3386	0.984	1.614	0.472	1/2-20UNF	0.362	71500	44700	2.18
UC311-34	2-1/8											2.12
UC311-35	2-3/16											2.04
UC312	60	130	71	36	26	45	12	M12X1.5	9.8			2.60
UC312-36	2-1/4											2.75
UC312-37	2-5/16	5.1181	2.7953	1.4173	1.0236	1.772	0.472	1/2-20UNF	0.386	81700	51800	2.67
UC312-38	2-3/8											2.58
UC312-39	2-7/16											2.50
UC313	65	140	75	38	30	45	12	M12X1.5	10.5			3.25
UC313-40	2-1/2	5.5118	2.9528	1.4961	1.181	1.772	0.472	1/2-20UNF	0.413	92500	60000	3.34
UC313-41	2-9/16											3.24
UC314	70	150	78	40	33	45	12	M12X1.5	11.1			3.89
UC314-42	2-5/8											4.11
UC314-43	2-11/16	5.9055	3.0708	1.5748	1.299	1.772	0.472	1/2-20UNF	0.437	104500	68000	4.0
UC314-44	2-3/4											3.90
UC315	75	160	82	42	32	50	14	M14X1.5	11.8			4.72
UC315-45	2-13/16											4.99
UC315-46	2-7/8	6.2992	3.2283	1.6535	1.260	1.969	0.551	9/16-18UNF	0.465	113000	77000	4.85
UC315-47	2-15/16											4.76
UC315-48	3											4.63
UC316	80	170	86	44	34	52	14	M14X1.5	12.5			5.55
UC316-49	3-1/16											5.72
UC316-50	3-1/8	6.6929	3.3858	1.7323	1.339	2.047	0.551	9/16-18UNF	0.492	123000	86500	5.58
UC316-51	3-3/16											5.49
UC317	85	180	96	46	40	56	16	M16X1.5	13.1			6.67
UC317-52	3-1/4											6.89
UC317-53	3-5/16	7.0866	3.7795	1.8110	1.575	2.205	0.630	5/8-18UNF	0.516	132600	96500	6.76
UC317-55	3-7/16											6.44
UC318	90	190	96	48	40	56	16	M16X1.5	13.8			7.56
UC318-55	3-7/16	7.4803	3.7795	1.8898	1.575	2.205	0.630	5/8-18UNF	0.543	144000	108000	7.85
UC318-56	3-1/2											7.67
UC319	95	200	103	50	41	62	16	M16X1.5	14.7			8.70
UC319-58	3-5/8											9.03
UC319-59	3-11/16	7.8740	4.0551	1.9685	1.614	2.441	0.630	5/8-18UNF	0.579	156600	122000	8.85
UC319-60	3-3/4											8.66
UC320	100	215	108	54	42	66	18	M18x1.5	15.7	17300	141000	11.2
UC320-64	4	8.4646	4.2520	2.1260	1.6535	2.5984	0.7087		0.618			11.0
UC322	110	240	117	60	46	71	18	M18x1.5	17.7	205000	179000	15.1
		9.4488	4.6063	2.3622	1.8110	2.7953	0.7087		0.697			
UC324	120	260	126	64	51	75	18	M18x1.5	19	227000	207000	19.0
		10.2362	4.9606	2.5197	2.0079	2.9528	0.7087		0.748			
UC326	130	280	135	68	54	81	20	M20x1.5	20	253000	241000	23.6
		11.0236	5.3150	2.6771	2.1260	3.1890	0.7874		0.787			
UC328	140	300	145	72	59	86	20	M20x1.5	22	274000	272000	29.4
		11.810	5.7087	2.8346	2.3228	3.3858	0.7874		0.866			

Ball Bearings

HC3 (Heavy-duty)

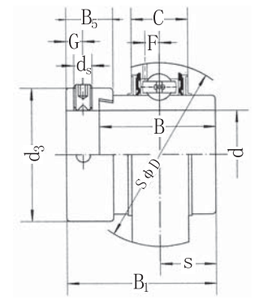

SL TYPE SEAL

L3 TYPE SEAL

Unit No.	Dimensions mm in.											Dynamic load ratings N	Static load ratings N	Weight (kg)
	d	D	B_1	B	C	S	d_s	G	B_5	d_3	F			
HC305	25	62	46.8	34.9	20	16.7	M8x1	6	15.9	42.8	5.4			0.43
HC305-13	13/16													0.49
HC305-14	7/8	2.4409	1.843	1.3740	0.7874	0.657	5/16-24UNF	0.236	0.626	1.500	0.213	22400	11500	0.48
HC305-15	15/16													0.46
HC305-16	1													0.44
HC306	30	72	50	36.5	23	17.5	M8x1	7	17.5	50	5.7			0.69
HC306-17	1-1/16													0.71
HC306-18	1-1/8	2.8346	1.969	1.4370	0.9055	0.689	5/16-24UNF	0.276	0.689	1.752	0.224	26700	15000	0.68
HC306-19	1-3/16													0.66
HC307	35	80	51.6	38.1	25	18.3	M8x1	7	17.5	55	6.2			0.80
HC307-20	1-1/4													0.87
HC307-21	1-5/16	3.1496	2.031	1.5000	0.9843	0.720	5/16-24UNF	0.276	0.689	2.189	0.244	33500	19100	0.83
HC307-22	1-3/8													0.80
UC307-23	1-7/16													0.77
HC308	40	90	57.1	41.3	27	19.8	M10x1	8	20.6	63.5	7.0			1.08
HC308-24	1-1/2	3.5433	2.248	1.6260	1.0630	0.780	3/8-24UNF	0.315	0.811	2.374	0.276	40500	24000	1.17
HC308-25	1-9/16													1.13
HC309	45	100	58.7	42.9	30	19.8	M10x1	8	20.6	70	7.8			1.46
HC309-26	1-5/8													1.54
HC309-27	1-11/16	3.9370	2.311	1.6890	1.1811	0.780	3/8-24UNF	0.315	0.811	2.500	0.307	52800	31800	1.49
HC309-28	1-3/4													1.44
HC310	50	110	66.6	49.2	32	24.6	M10x1	9	22.2	76.2	8.5			1.86
HC310-29	1-13/16													2.00
HC310-30	1-7/8	4.3307	2.622	1.9370	1.2598	0.969	3/8-24UNF	0.354	0.874	2.752	0.335	61800	37900	1.95
HC310-31	1-15/16													1.88
HC311	55	120	73.0	55.6	34	27.8	M10x1	9	22.2	83	9.2			2.34
HC311-32	2													2.53
HC311-33	2-1/16	4.7244	2.874	2.1850	1.3386	1.094	3/8-24UNF	0.354	0.874	3.000	0.362	71500	44700	2.44
HC311-34	2-1/8													2.38
HC311-35	2-3/16													2.30
HC312	60	130	79.4	61.9	36	30.95	M10x1	9	23.9	89	9.8			2.94
HC312-36	2-1/4													3.08
HC312-37	2-5/16	5.1181	3.126	2.4370	1.4173	1.219	3/8-24UNF	0.354	0.941	3.315	0.386	81700	51800	3.02
HC312-38	2-3/8													2.94
HC312-39	2-7/16													2.81
HC313	65	140	85.2	64.6	38	32.55	M12x1.5	10.5	27	97	10.5			3.64
HC313-40	2-1/2	5.5118	3.354	2.5433	1.4961	1.282	1/2-20UNF	0.413	1.063	3.819	0.413	92500	60000	3.73
HC313-41	2-9/16													3.72
HC314	70	150	92.1	68.3	40	34.15	M12x1.5	12	30.2	102	11.1			4.37
HC314-42	2-5/8													4.69
HC314-43	2-11/16	5.9055	3.626	2.6890	1.5748	1.344	1/2-20UNF	0.472	1.189	4.016	0.437	104500	68000	4.60
HC314-44	2-3/4													4.49
HC315	75	160	100	74.6	42	37.3	M16x1.5	13	31.8	113	11.8			5.30
HC315-45	2-13/16													5.95
HC315-46	2-7/8	6.2992	3.937	2.9370	1.6535	1.469	5/8-18UNF	0.512	1.252	4.449	0.456	113000	77000	5.81
HC315-47	2-15/16													5.72
HC315-48	3													5.63
HC316	80	170	106.4	81	44	40.5	M16x1.5	13	31.8	119	12.5			6.66
HC316-49	3-1/16													6.72
HC316-50	3-1/8	6.6929	4.189	3.1890	1.7323	1.594	5/8-18UNF	0.512	1.252	4.685	0.492	123000	86500	6.67
HC316-51	3-3/16													6.58
HC317	85	180	109.5	84.1	46	42.05	M16x1.5	13	31.8	127	13.1			7.95
HC317-52	3-1/4													8.12
HC317-53	3-5/16	7.0866	4.311	3.3110	1.8110	1.656	5/8-18UNF	0.512	1.252	5.000	0.516	132600	96500	7.98
HC317-55	3-7/16													7.66
HC318	90	190	115.9	87.3	48	43.65	M20x1.5	14.5	36.5	133	13.8			9.05
HC318-55	3-7/16	7.4803	4.563	3.4370	1.8898	1.719	3/4-16UNF	0.571	1.437	5.236	0.543	144000	108000	9.34
HC318-56	3-1/2													9.11
HC319	95	200	122.3	93.7	50	38.9	M20x1.5	14.5	36.5	140	14.7			10.34
HC319-58	3-5/8													10.56
HC319-59	3-11/16	7.8740	4.815	3.6890	1.9685	1.531	3/4-16UNF	0.571	1.437	5.512	0.579	156600	122000	10.38
HC319-60	3-3/4													10.19
HC320	100	215	128.6	100	54	50	M20x1.5	14.5	36.5	146	15.7	17300	141000	12.43
HC320-64	4	8.4646	5.063	3.9370	2.1260	1.969	3/4-16UNF	0.571	1.437	5.748	0.618			12.18

UK3 (Heavy-duty)

Ball Bearings
(with adapter mounted)

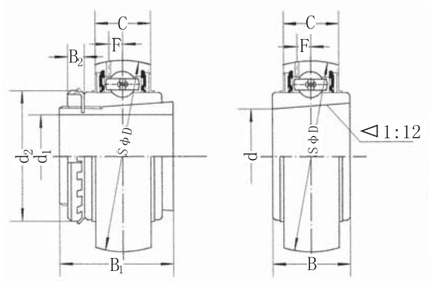

UK3+H,HA,HS,HE23

SL TYPE SEAL

L3 TYPE SEAL

Unit No.	Dimensions mm / in. d	D	B	C	d_1	B_1	B_2	d_2	F	Dynamic load ratings N	Static load ratings N	Weight (kg)
UK305;H2305 UK305;HE2305	25 0.9843	62 2.4409	26 1.0236	20 0.7874	20 3/4	35 1.378	8 0.135	38 1.496	5.4 0.213	22400	11500	0.39
UK306;H2306 UK306;HS2306 UK306;HE2306	30 1.1811	72 2.8346	29 1.1417	23 0.9055	25 7/8 1	38 1.496	8 0.315	45 1.772	5.7 0.244	26700	15000	0.59
UK307;H2307 UK307;HS2307	35 1.3780	80 3.1496	33 1.2992	25 0.9843	30 1-1/8	43 1.693	9 0.354	52 2.047	6.2 0.244	33500	19100	0.75
UK308;H2308 UK308;HE2308 UK308;HS2308	40 1.5748	90 3.5433	34 1.3386	27 1.0630	35 1-1/4 1-3/8	46 1.811	10 0.394	58 2.283	7.0 0.276	40500	24000	1.00
UK309;H2309 UK309;HA2309 UK309;HE2309 UK309;HS2309	45 1.7717	100 3.9370	37 1.4567	30 1.1611	40 1-7/16 1/12 1-5/8	50 1.969	12 0.433	65 2.559	7.8 0.307	52800	31800	1.35
UK310;H2310 UK310;HS2310 UK310;HA2310 UK310;HE2310	50 1.9685	110 4.3307	41 1.6142	32 1.2598	45 1-5/8 1-11/16 1-3/4	55 2.165	12 0.472	70 2.756	8.5 0.335	61800	37900	1.77
UK311;H2311 UK311;HS2311 UK311;HA2311 UK311;HE2311	55 2.1654	120 4.7244	44 1.7323	34 1.3386	50 1-7/8 1-15/16 2	59 2.323	12 0.472	75 2.953	9.2 0.362	71500	44700	2.21
UK312;H2312 UK312;HS2312	60 2.3622	130 5.1181	47 1.8504	36 1.4173	55 2-1/8	62 2.441	13 0.512	80 3.150	9.8 0.386	81700	51800	2.54
UK313;H2313 UK313;HA2313 UK313;HE2313 UK313;HS2313	65 2.5591	140 5.5118	49 1.9291	38 1.4961	60 2-3/16 2-1/4 2-3/8	65 2.559	14 0.551	85 3.346	10.5 0.413	92500	60000	3.27
UK315;H2315 UK315;HA2315 UK315;HE2315	75 2.9528	160 6.2992	55 2.1654	42 1.6535	65 2-7/16 2-1/2	73 2.874	15 0.591	98 3.858	11.8 0.465	113000	77000	4.85
UK316;H2316 UK316;HA2316 UK316;HE2316	80 3.1496	170 6.6929	55 2.1654	44 1.7323	70 2-11/16 2-3/4	78 3.071	17 0.669	105 4.134	12.5 0.492	123000	86500	5.67
UK317;H2317 UK317;HA2317 UK317;HE2317	85 3.3465	180 7.0866	60 2.3622	46 1.8110	75 2-15/16 3	82 3.228	18 0.709	110 4.331	13.1 0.516	132000	96500	6.75
UK318;H2318 UK318;HA2318	90 3.5433	190 7.4803	63 2.4800	48 1.8898	80 3-3/16	86 3.386	18 0.709	120 4.724	13.8 0.441	144000	108000	7.99
UK319;H2319 UK319;HA2319	95 3.7402	200 7.8740	66 2.5984	50 1.9685	85 3-5/16	90 3.543	19 0.748	125 8.465	14.7 0.579	156600	122000	9.23
UK320;H2320 UK320;HA2320	100 3.9370	215 8.4646	68 2.6771	54 2.1260	90 3-7/16	97 3.814	20 0.787	130 5.118	15.7 0.618	173000	141000	10.85
UK322;H2322 UK322;HA2322	110 4.3307	240 9.4488	78 3.0709	60 2.3622	100 3-15/16	105 4.134	21 0.827	145 5.709	17.7 0.697	205000	179000	14.94
UK324;H2324 UK324;HA2324	120 4.7244	260 10.2362	87 3.4252	64 2.5197	110 4-3/16	112 4.410	22 0.866	1 55 6.102	19 0.748	227000	207000	19.29
UK326;H2326 UK326;HA2326	130 5.1181	280 11.0236	87 3.4252	68 2.6771	115 4-7/16	121 4.764	23 0.906	165 6.496	20 0.787	253000	241000	23.4
UK328;H2328 UK328;HA2328	140 5.5118	300 11.8110	97 3.8189	72 2.8189	125 4-15/16	131 5.158	24 0.945	180 7.087	22 0.866	274000	272000	29.45

Ball Bearings
(with locating snap ring)

SER2 (Normal-duty)

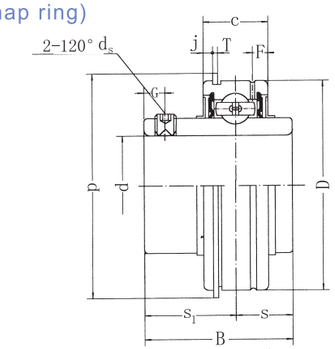

SL TYPE SEAL

L3 TYPE SEAL

Suffix UNF: Inch sized set screws

Bearing No.	Dimensions mm / in. d	D	B	C	S	S_1	T	F	J	P	G	d_s	Dynamic load ratings N	Static load ratings N	Weight (kg)
SER201 SER201-8	12 1/2	47 1.8504	31 1.2205	15.9 0.6260	10.3 0.406	20.7 0.815	1.12 0.044	3.8 0.150	2.46 0.097	52.7 2.057	4.8 0.189	M6x1 1/4-28UNF	12800	6650	0.22
SER202 SER202-10	15 5/8														0.22
SER203	17														0.22
SER204 SER204-12	20 3/4	47 1.8504	31 1.2205	15.9 0.6260	10.3 0.406	20.7 0.815	1.12 0.044	3.8 0.150	2.46 0.097	52.7 2.075	4.8 0.189	M6 x 1 1/4-28UNF	12800	6650	0.21
SER205 SER205-13 SER205-14 SER205-15 SER205-16	25 13/16 7/8 15/16 1	52 2.0472	34.9 1.3740	19 0.7480	13.1 0.516	21.8 0.858	1.12 0.044	5.2 0.205	2.46 0.097	57.9 2.280	5 0.197	M6 x 1 1/4-28UNF	14000	7850	0.27
SER206 SER206-17 SER206-18 SER206-19 SER206-20	30 1-1/16 1-1/8 1-3/16 1-1/4	62 2.4409	38.1 1.5000	22.2 0.8740	15.9 0.626	22.2 0.874	1.7 0.067	5.6 0.220	3.28 0.129	67.7 2.665	5 0.197	M6 x 1 1/4-28UNF	19500	11300	0.39
SER207 SER207-20 SER207-21 SER207-22 SER207-23	35 1-1/4 1-5/16 1-3/8 1-7/16	72 2.8346	42.9 1.6890	23.8 0.9370	17.5 0.689	25.4 1.000	1.7 0.067	5.6 0.220	3.28 0.129	78.6 3.094	6.7 0.264	M8 x 1 5/16-24UNF	25700	15300	0.63
SER208 SER208-24 SER208-25	40 1-1/2 1-9/16	80 3.1496	49.2 1.9370	27.8 1.0945	19 0.748	30.2 1.189	1.7 0.067	6.4 0.252	3.28 0.129	86.6 3.409	8 0.315	M8 x 1 5/16-24UNF	29500	18100	0.81
SER209 SER209-26 SER209-27 SER209-28	45 1-5/8 1-11/16 1-3/4	85 3.3465	49.2 1.9370	27.8 1.0945	19 0.748	30.2 1.189	1.7 0.067	6.4 0.252	3.28 0.129	91.6 3.606	8 0.315	M8 x 1 5/16-24UNF	31600	20600	0.90
SER210 SER210-29 SER210-30 SER210-31 SER210-32	50 1-13/16 1-7/8 1-15/16 2	90 3.5433	51.6 2.0315	28.6 1.1260	19 0.748	32.6 1.283	2.46 0.097	7.5 0.295	3.28 0.129	96.5 3.799	10 0.394	M10 x 1 3/8-24UNF	35000	23200	0.98
SER211 SER211-32 SER211-33 SER211-34 SER211-35	55 2 2-1/16 2-1/8 2-3/16	100 3.9370	55.6 2.1890	30.2 1.1890	22.2 0.874	33.4 1.315	2.46 0.097	7.5 0.295	3.28 0.129	106.5 4.193	10 0.394	M10 x 1 3/8-24UNF	43500	29200	1.40
SER212 SER212-36 SER212-37 SER212-38 SER212-39	60 2-1/4 2-5/16 2-3/8 2-7/16	110 4.3307	65.1 2.5630	31.8 1.2520	25.4 1.000	39.7 1.563	2.46 0.097	7.5 0.295	3.28 0.129	116.6 4.591	10 0.394	M10 x 1 3/8-24UNF	47700	32900	1.89

SA2 (Light-duty)

Ball Bearings
(with eccentric locking collar)

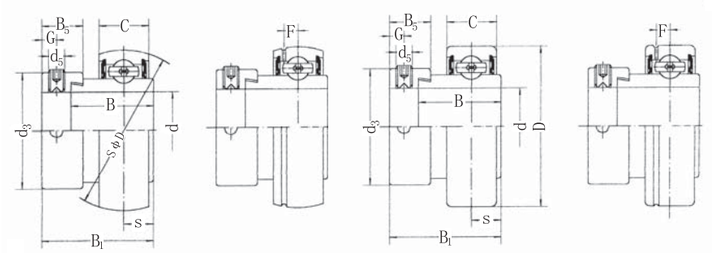

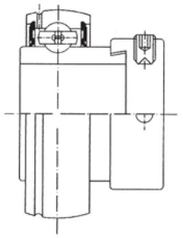

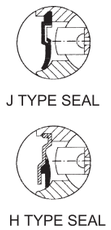

SA2 SA2G CSA2 CSA2G SA2RG

Suffix UNF: Inch sized set screws

Bearing No.	Dimensions mm / in. d	D	B_1	B	C	S	d_4	G	B_5	d_5	Dynamic load ratings N	Static load ratings N	Weight (kg)
SA201	12	40	28.6	19.1	12	6.5	M6 x 1	4.8	13.5	28.6	9600	4600	0.12
SA201-8	1/2	1.5748	1.126	0.7520	0.4724	0.256	1/4-28UNF	0.189	0.531	1.126			0.12
SA202	15	40	28.6	19.1	12	6.5	M6 x 1	4.8	13.5	28.6	9600	4600	0.10
SA202-9	9/16	1.5748	1.126	0.7520	0.4724	0.256	1/4-28UNF	0.189	0.531	1.126			0.10
SA202-10	5/8												0.10
SA203	17	40	28.6	19.1	12	6.5	M6 x 1	4.8	13.5	28.6	9600	4600	0.09
SA203-11	11/16	1.5748	1.126	0.7520	0.4724	0.256	1/4-28UNF	0.189	0.531	1.126			0.09
SA204	20	47	31	21.5	14	7.5	M6 x 1	4.8	13.5	33.3	12800	6650	0.16
SA204-12	3/4	1.8504	1.220	0.8465	0.5512	0.295	1/4-28UNF	0.189	0.531	1.311			0.16
SA205	25	52	31	21.5	15	7.5	M6 x 1	4.8	13.5	38.1	14000	7850	0.20
SA205-13	13/16	2.0472	1.220	0.8465	0.5906	0.295	1/4 -28UNF	0.189	0.531	1.500			0.22
SA205-14	7/8												0.21
SA205-15	15/16												0.21
SA205-16	1												0.20
SA206	30	62	35.7	23.8	16	9	M8 x 1	6	15.9	44.5	19500	11300	0.30
SA206-17	1-1/16	2.4409	1.406	0.9370	0.6299	0.354	5/16-28UNF	0.236	0.626	1.752			0.32
SA206-18	1-1/8												0.31
SA206-19	1-3/16												0.30
SA206-20	1-1/4												0.29
SA207	35	72	38.9	25.4	17	9.5	M8 x 1	6.8	17.5	55.6	25700	15300	0.42
SA207-20	1-1/4	2.8346	1.531	1.000	0.6693	0.374	5/16 -24UNF	0.268	0.689	2.189			0.46
SA207-21	1-5/16												0.43
SA207-22	1-3/8												0.42
SA207-23	1-7/16												0.41
SA208	40	80	43.7	30.2	18	11	M8 x 1	6.8	18.3	60.3	29500	18100	0.60
SA208-24	1-1/2	3.1496	1.721	1.1890	0.7087	0.433	5/16 -24UNF	0.268	0.720	2.374			0.58
SA208-25	1-9/16												0.60
SA209	45	85	43.7	30.2	19	11	M8 x 1	6.8	18.3	63.5	31600	20600	0.67
SA209-26	1-5/8	3.3465	1.721	1.1890	0.7480	0.433	5/16-24UNF	0.268	0.720	2.500			
SA209-27	1-11/16												
SA209-28	1-3/4												
SA210	50	90	43.7	30.2	20	11	M8 x 1	6.8	18.3	69.9	35000	23200	0.75
SA210-29	1-13/16	3.5433	1.721	1.1890	0.7874	0.433	5/16 -24UNF	0.268	0.720	2.752			
SA210-30	1-7/8												
SA210-31	1-15/16												
SA210-32													
SA211	55	100	48.4	32.5	21	12	M8x1	8	20.7	76.2	43500	29200	1.00
SA211-32		3.9370	1.906	1.2795	0.8268	0.472	5/16-24UNF	0.315	0.815	3.000			
SA211-33	2-1/16												
SA211-34	2-1/8												
SA211-35	2-3/16												
SA212	60	110	53.1	37.2	22	13.5	M10 x 1	8	22.3	84.2	47700	32900	1.34
SA212-36	2-1/4	4.3307	2.091	1.4646	0.8661	0.532	3/8 -24UNF	0.315	0.878	3.315			
SA212-37	2-5/16												
SA212-38	2-3/8												
SA212-39	2-7/16												

Ball Bearings

SB2 (Light-duty)

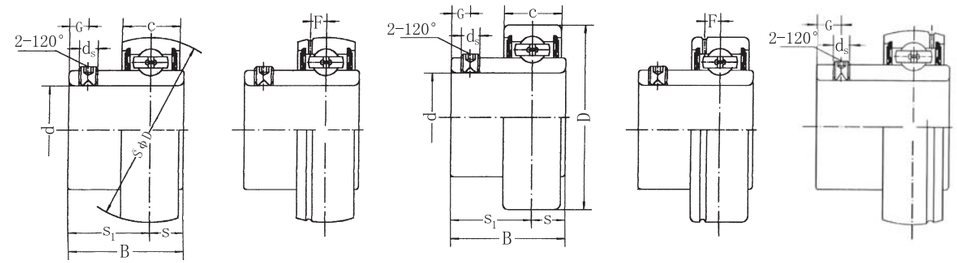

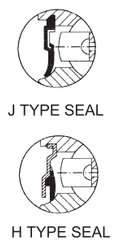

SB2 SB2G CSB2 CSB2G SB2RG

Suffix UNF: Inch sized set screws

Bearing No.	Dimensions mm / in. d	D	B	C	S	S_1	d_4	G	Dynamic load ratings N	Static load ratings N	Weight (kg)
SB201	12	40	22	12	6	16	M5 x 0.8	4.5	9600	4600	0.10
SB201-8	1/2	1.5748	0.8661	0.4724	0.236	0.630	10#-32	0.177			0.10
SB202	15	40	22	12	6	16	M5 x 0.8	4.5	9600	4600	0.10
SB202-9	9/16	1.5748	0.8661	0.4724	0.236	0.630	10#-32	0.177			0.10
SB202-10	5/8										0.10
SB203	17	40	22	12	6	16	M5 x 0.8	4.5	9600	4600	0.09
SB203-11	11/16	1.5748	0.8661	0.4724	0.236	0.630	10#-32	0.177			0.09
SB204	20	47	25	14	7	18	M6 x 1	4.5	12800	6650	0.13
SB204-12	3/4	1.8504	0.9843	0.5512	0.276	0.709	1/4-28UNF	0.177			0.14
SB205	25	52	27	15	7.5	19.5	M6 x 1	5.5	14000	7850	0.16
SB205-13	13/16	2.0472	1.0630	0.5906	0.295	0.768	1/4-28UNF	0.217			0.19
SB205-14	7/8										0.18
SB205-15	15/16										0.17
SB205-16	1										0.16
SB206	30	62	30	16	8	22	M6 x 1	6	19500	11300	0.25
SB206-17	1-1/16	2.4409	1.1811	0.6299	0.315	0.866	1/4-28UNF	0.236			0.28
SB206-18	1-1/8										0.26
SB206-19	1-3/16										0.25
SB206-20	1-1/4										0.24
SB207	35	72	32	17	8.5	23.5	M8 x 1	6.5	25700	15300	0.38
SB207-20	1-1/4	2.8346	1.2598	0.6693	0.335	0.925	5/16-24UNF	0.256			0.43
SB207-21	1-5/16										0.41
SB207-22	1-3/8										0.38
SB207-23	1-7/16										0.37
SB208	40	80	34	18	9	25	M8 x 1	7	29500	18100	0.60
SB208-24	1-1/2	3.1496	1.3386	0.7087	0.354	0.984	5/16-24UNF	0.276			0.58
SB208-25	1-9/16										0.60
SB209	45	85	41.2	19	10.2	31	M8 x 1	8.2	31600	20600	0.8
SB209-26	1-5/8	3.3465	1.6220	0.7480	0.402	1.220	5/16-24UNF	0.323			
SB209-27	1-11/16										
SB209-28	1-3/4										
SB210	50	90	43.5	20	10.9	32.6	M10 x 1	9.2	35000	23200	0.8
SB210-29	1-13/16	3.5433	1.7126	0.7874	0.429	1.283	3/8-24UNF	0.362			
SB210-30	1-7/8										
SB210-31	1-15/16										
SB210-32	2										
SB211	55	100	45.3	21	11.8	33.5	M10 x 1	9.8	43500	29200	1.1
SB211-32	2	3.9370	1.7835	0.8268	0.465	1.319	3/8-24UNF	0.386			
SB211-33	2-1/16										
SB211-34	2-1/8										
SB211-35	2-3/16										
SB212	60	110	53.7	22	14.9	38.8	M10 x 1	9.8	47700	32900	1.3
SB212-36	2-1/4	4.3307	2.1142	0.8661	0.587	1.528	3/8 -24UNF	0.386			
SB212-37	2-5/16										
SB212-38	2-3/8										
SB212-39	2-7/16										

SC2 (Light-duty)
SC3 (Heavy-duty)

Ball Bearings

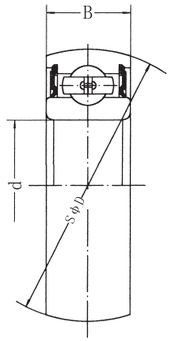

J TYPE SEAL

Bearing No.	Dimensions mm in. d	D	B	Dynamic load ratings N	Static load ratings N	Weight (kg)
SC200	10 0.3937	30 1.1811	9 0.3543	5100	2230	0.031
SC201	12 0.4724	32 1.2598	10 0.3937	6800	3050	0.033
SC202	15 0.5906	35 1.3780	11 0.4331	7600	3490	0.043
SC203	17 0.6693	40 1.5748	12 0.4724	9600	4600	0.061
SC204	20 0.7874	47 1.8504	14 0.5512	12800	6650	0.098
SC205	25 0.9843	52 2.0472	15 0.5906	14000	7850	0.122
SC206	30 1.1811	62 2.4409	16 0.6299	19500	11300	0.195
SC207	35 1.3780	72 2.8346	17 0.6693	25700	15300	0.280
SC208	40 1.5748	80 3.1496	18 0.7087	29500	18100	0.358
SC209	45 1.7717	85 3.3465	19 0.7480	31600	20600	0.405
SC210	50 1.9685	90 3.5433	20 0.7874	35000	23200	0.449
SC211	55 2.1654	100 3.9370	21 0.8268	43500	29200	0.589
SC212	60 2.3622	110 4.3307	22 0.8661	47700	32900	0.774
SC302	15 0.5906	42 1.6535	13 0.5118	11440	5430	0.076
SC303	17 0.6693	47 1.8504	11914 0.5512	13585	6560	0.105
SC304	20 0.7874	52 2.0472	15 0.5906	15938	7810	0.137
SC305	25 0.9843	62 2.4409	17 0.6693	22400	11500	0.211
SC306	30 1.1181	72 2.8346	19 0.7480	26700	15000	0.338
SC307	35 1.3780	80 3.1496	5721 0.8268	33500	19100	0.439
SC308	40 1.5748	90 3.5433	23 0.9055	40500	24000	0.618
SC309	45 1.7717	100 3.9370	25 0.9843	52800	31800	0.810
SC310	50 1.9685	110 4.3307	27 1.0630	61800	39700	1.048
SC311	55 2.1654	120 4.7244	29 1.1417	71500	44700	1.326
SC312	60 2.3622	130 5.1181	31 1.2205	81700	51800	1.659

Ball Bearings

K000 (Light-duty)
MK000 (Light-duty)

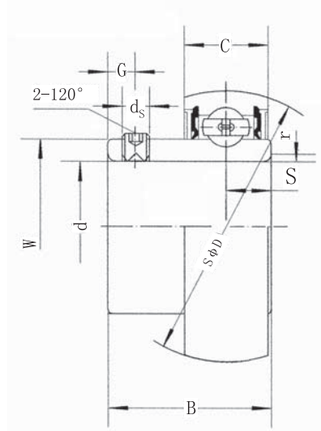

Bearing No.	Dimensions mm in. d	D	B	C	r	S	G	d_s	Dynamic load ratings N	Static load ratings N	Weight (kg)
K000 MK000	10	26 1.0236	14 0.551	8 0.315	0.5	4 0.157	3 0.118	M3x0.35	4606	1906	0.02
K001 MK001	12	28 1.1024	14.5 0.571	8 0.315		4 0.157	3 0.118	M3x0.35	5096	2401	0.03
K002 MK002	15	32 1.2598	16.5 0.650	9 0.354		4.5 0.177	3.5 0.138	M4x0.5	5586	2842	0.05
K003 MK003	17	35 1.3779	17.5 0.689	10 0.394		5 0.197	3.5 0.138	M4x0.5	5978	3283	0.05
K004 MK004	20	42 1.6535	21 0.827	12 0.472	1	6 0.236	4 0.157	M5x0.5	9359	5047	0.09
K005 MK005	25	47 1.8504	22.5 0.886	12 0.472		6 0.236	4.5 0.177	M5x0.5	10094	5831	0.10
K006 MK006	30	55 2.1653	24.5 0.965	13 0.512	1.5	6.5 0.256	5 0.197	M5x0.5	13230	8281	0.15

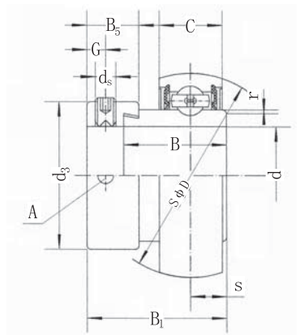

U000 (Light-duty)
MU000 (Light-duty)

Bearing No.	Dimensions mm in. d	D	B_1	B	C	r	S	B_5	d_3	A	d_s	Dynamic load ratings N	Static load ratings N	Weight (kg)
U000 MU000	10	26 1.0236	17.5 0.689	11 0.433	8 0.315	0.5	4 0.157	8.5 0.335	17 0.669	3.5 0.138	M4x0.7	4606	1906	0.03
U001 MU001	12	28 1.1024	17.5 0.689	11 0.433	8 0.315		4 0.157	8.5 0.335	19 0.748	3.5 0.138		5096	2401	0.04
U002 MU002	15	32 1.2598	18.5 0.728	12 0.472	9 0.354		4.5 0.177	8.5 0.335	22 0.866	3.5 0.138		5586	2842	0.05
U003 MU003	17	35 1.3779	20.5 0.807	13.5 0.531	10 0.394		5 0.197	9.5 0.374	25 0.984	3.5 0.138		5978	3283	0.06
U004 MU004	20	42 1.6535	24.5 0.964	16.5 0.650	12 0.472	1	6 0.236	11 0.433	30 1.181	5 0.197	M5x0.8	9359	5047	0.10
U005 MU005	25	47 1.8504	25.5 1.004	17.5 0.689	12 0.472		6 0.236	12 0.472	36 1.417	5 0.197		10094	5831	0.14
U006 MU006	30	55 2.1653	26.5 1.043	18.5 0.728	13 0.512	1.5	6.5 0.256	12 0.472	42 1.653	5 0.197		13230	8281	0.19
U007 MU007	35	62 2.44	29.5 1.161	20 0.787	14 0.551	1.5	7 0.276	13.5 0.531	48 1.889	5 0.197	M6x0.75	15920	10290	0.25

Stainless Steel Bearing Units

FK100% stainless steel units are manufactured from select grade of stain –less steel which has been carefully inspected to meet the asked for:

- Optimal corrosion resistance
- Bearing life is excellent, it is not limited to the life of the coating and/or nickle plating.
- Scratches and mars have absolutely no effect on the bearing's ability to resist rust and corrosion
- Excellent for use in food processing, beverage, curative, and other high-corrosive application.

Material

Description	Material
Inner & Outer rings	AISI440C Stainless steel
Balls	AISI440C Stainless steel
Cage	AISI304 Stainless steel
Lubrication	Food grease
Seal	Nitril rubber
Slinger	AISI304 Stainless steel
Set Screw	AISI304 Stainless steel
Housing	AISI304 Stainless steel
Grease Nipple	AISI304 Stainless steel
End–cover	AISI304 Stainless steel
Range of operating temperature	–20℃+120℃

Type & Dimensions

Description	Interchange
M-UC2 Series	Page No. 109
M-HC2 Series	Page No. 110
M-SER2 Series	Page No. 117
M-SA2 Series	Page No. 118
M-SB2 Series	Page No. 119
M-SC2 Series	Page No. 120
M-K000, M-U000 Series	Page No. 121
M-UCP2 Series	Page No. 25
M-UCF2 Series	Page No. 38
M-UCFC2 Series	Page No. 49
M-UCFL2 Series	Page No. 57
M-UCT2 Series	Page No. 68
M-UCPA2 Series	Page No. 83
M-UCFB2 Series	Page No. 89
M-UCHA2 Series	Page No. 90
M-UP000, KP000 Series	Page No. 123
M-UFL000, KFL000 Series	Page No. 124

Silever Series

KP000
UP000 (Light-duty)

- Rustproff housings made with a special alloy
- Bearings are high carbon chromium bearing steel

UP000 type*
Pillow Blocks
With eccentric locking collar

KP000 type*
Pillow Blocks
With set screw locking

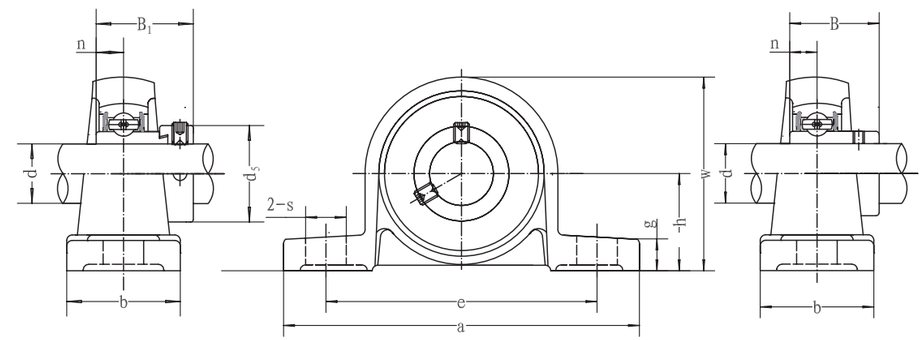

UP000 KP000

Unit NO.	Dimensions mm / in.								KP000				UP000					Bolt Size mm	Housing NO.
	d	h	a	e	b	s	g	w	B	n	Bearing NO.	Weight (g)	B_1	n	d_5	Bearing NO.	Weight (g)		
KP000 UP000	10	18 23/32	67 2-41/64	53 2-3/32	16 5/8	7 9/32	6 15/64	35 1-3/8	14 0.551	4 0.157	K000	70	17.5 0.689	4 0.157	17 43/64	U000	80		P000
KP001 UP001	12	19 3/4	71 2-51/64	56 2-13/64	16 5/8	7 9/32	6 15/64	38 1-1/2	14.5 0.571	4 0.157	K001	90	17.5 0.689	4 0.157	19 3/4	U001	90	M6	P001
KP002 UP002	15	22 7/8	80 3-5/32	63 2-31/64	16 5/8	7 9/32	7 9/32	43 1-11/16	16.5 0.650	4.5 0.177	K002	130	18.5 0.728	4.5 0.177	22 65/64	U002	130		P002
KP003 UP003	17	24 15/16	85 3-11/32	67 2-5/8	18 23/32	7 9/32	7 9/32	47 1-27/37	17.5 0.689	5 0.197	K003	160	20.5 0.807	5 0.197	25 31/32	U003	160	M6	P003
KP004 UP004	20	28 1-3/32	100 3-15/16	80 3-5/32	20 25/32	9 23/64	9 23/64	55 2-11/64	21 0.827	6 0.236	K004	230	24.5 0.965	6 0.236	30 1-3/16	U004	230	M8	P04-5
KP005 UP005	25	32 1-17/64	112 4-13/32	90 3-35/64	20 25/32	10 25/64	10 25/64	62 2-7/16	22.5 0.886	6.5 0.236	K005	290	25.5 1	6.5 0.236	36 1-27/64	U005	290	M8	P05-6
KP006 UP006	30	36 5-13/64	132 5-13/64	106 4-11/64	26 1-1/32	13 33/64	11 7/16	70 2-3/4	24.5 0.965	6.5 0.256	K006	450	26.5 1.04	6.5 0.256	42 1-21/32	U006	450	M10	P06-7

*ALSO AVAILABLE WITH STAINLESS STEEL INSERT AND HOUSING

UFL000 (Light-duty)
KFL000

Silver Series

- Rustproff housings made with a special alloy
- Bearings are high carbon chromium bearing steel

UFL000 type*

TWO-BOLT FLANGE UNITS
With Eccentric Collar Locking

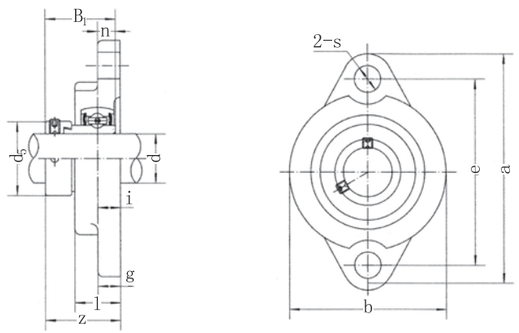

KFL000 type*

TWO-BOLT FLANGE UNITS
With Set Screw Locking

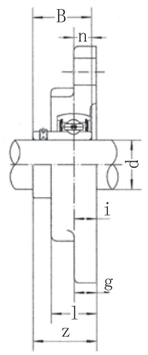

Unit NO.	Dimensions mm in.								KFL000					UFL000						Bolt Size mm	Housing NO.
	d	a	e	i	g	l	s	b	Z	B	n	Bearing NO.	Weight (g)	Z	B_1	n	d_5	Bearing NO.	Weight (g)		
KFL000 UFL000	10	60 2-23/64	45 1-25/35	5.5 7/32	5.5 7/32	11.5 29/64	7 9/32	36 1-27/64	15.5 39/64	14 39/64	4 0.157	K000	60	19 3/4	17.5 0.689	4 0.157	17 43/64	U000	60	M6	FL000
KFL001 UFL001	12	63 2-31/64	48 1-57/64	5.5 7/32	5.5 7/32	11.5 29/64	7 9/32	38 1-1/2	16 5/8	14.5 5/8	4 0.157	K001	70	19 3/4	17.5 0.689	4 0.157	19 3/4	U001	70	M6	FL001
UFL002 UFL002	15	67 2-41/64	53 2-3/32	6.5 1/4	6.5 1/4	13 33/64	7 9/32	42 1-21/32	18.6 47/64	16.5 47/64	4.5 0.177	K002	100	20.5 13/16	18.5 0.728	4.5 0.177	22 7/8	U002	100	M6	FL002
KFL003 UFL003	17	71 2-51/64	56 2-13/64	7 9/32	7 9/32	14 35/64	7 9/32	46 1-13/16	19.5 49/64	17.5 49/64	5 0.197	K003	130	22.5 57/64	20.5 0.807	5 0.197	25 31/32	U003	130	M6	FL003
KFL004 UFL004	20	90 3-35/64	71 2-51/64	8 5/16	8 5/16	16 5/8	10 25/64	55 2-11/64	23 29/32	21 29/32	6 0.236	K004	200	26.5 1-3/64	24.5 0.965	6 0.236	30 1-3/16	U004	200	M8	FL04-5
KFL005 UFL005	25	95 3-47/64	75 2-61/64	8 5/16	8 5/16	16 5/8	10 25/64	60 2-3/8	24.5 31/32	22.5 31/32	6 0.236	K005	250	27.5 1-3/32	25.5 1	6 0.236	36 1-27/64	U005	240	M8	FL05-6
KFL006 UFL006	30	85 4-13/32	85 3-11/32	9 23/64	9 23/64	18 23/32	13 33/64	70 2-3/4	27 1-1/6	24.5 1-1/6	6.5 0.256	K006	350	29 1-9/64	26.5 1.04	6.5 0.256	42 21/32	U006	350	M10	FL06-7
UFL007	35	122 4-51/64	95 3-3/4	10 25/64	10 25/64	20 25/32	13 33/64	80 3-5/32						32.5 1-9/32	29.5 1.161	7 0.276	48 1-57/64	U007	500	M10	FL07-8

Thermoplastic Bearing Units

The high grade thermoplastic raw material,from which FK manufactures its plastic products endower the final products with a collection of properties which make them very succesful and sought after products in the food and chemical industry. Main properties: high strength, low friction,high wear and shock resistance,high chemical resistance and antirust.

FK Thermoplastic housings

FK bearing housings are made by FK high-grade glass-filled thermoplastic polyester and they are completely interchangeable with conventional cast iron housings. These maintenance-free housings have excellent mechanical strength, stiffness and dimensional stability,yet they can never rust or corrode. Where high standards of cleanliness are important, such as in the food and foodhandeling industries, their smooth surfaces are much more hygienic than those of cast iron housings whose rough surfaces can harbor objectionable dirt, moldor bacteria.

No plating or coating to chip or peel

Coated or plated cast iron housings can scratch, chip and peel in fact, the very act of installing them causes the finish to be removed around the edges of the bolts that hold them in place. Because FK housings are solid PBT,coatings are not required to protect them. And even should they be scratched or chipped, there is no vulunerable cast iron that can be exposed.

Used in many industries

Because of their corrosion-resistant and non-magnetic properties, FK housings are used in a wide variety of indstries, including: food processing, canning, bottling,pharmaceutical, chemical processing and in many general industrial application.

FK Housings are durable

You can be completely confident that FK plastic housings will stand out to the toughest appliations. Tensile strength at break is an impressive 17, 300 psi. The housings can be cleaned or hosed down with hot water, and will operate at temperatures to 102℃ bolts and stainless steel grease nipple.

PROPERTIES OF PBT(Poly Butylece Terephthalate)

Properties	Unit	Test method	
Mechanical			–
Tensile strenght at yield	N/mm^2	ASTMD 638	115
at break	N/mm^2	ASTMD 638	–
Elongation at yield	%	ASTMD 638	3
at break	%	ASTMD 638	
Tensile modulus	N/mm^2	ASTMD 638	8000
Flexural yield strength	N/mm^2	ASTMD 790	–
Flexural yield strength	N/mm^2	ASTMD 790	170
Flexural modulus	N/mm^2	ASTMD 790	7000
Notched impact strength Charpy	K/m^2	DIN 53453	12
Notched impact strength IZOD	J/m	ASTMD 256	
Hardness H358/10	N/mm^2	DIN 53456	104
H358/60	N/mm^2	DIN 53456	101
Rockwell	–	ASTMD 785	L102
Thermal			
Oxygen index"	%	ASTM D 2863	19
Flame retareancy" (1/6mm thickness)	–	UL stand 94	94HB
Heat resistance: Vicat, method B	℃	ASTMD 1525	210-215
Thermal conductivity	W/m^2C	ASTM C 177	0.19
Mould shrinkage flow	%	ASTMD 1299	0.4-0.6
Cross flow direction	%	ASTMD 1299	0.6-0.8
Physical	–		
Water absorption 24 Hrs, 23℃	%	ASTM D 570	0.06

CHEMICAL RESISTANCE OF PBT

Chemical media	℃	Immulsion % Days	% Retention of strenght
Acids			
10% Hydrochloric	23	30	89
	23	90	85
	23	180	82
10% Sulfuric	23	30	97
	23	90	94
	23	180	90
36% Sulfuric (battery)	23	30	97
	23	180	96
	66	30	84
	66	180	35
10% Acetic	23	30	89
	23	180	88
Bases			
5% Potassium Hydroxide	23	30	83
	23	90	10
10% Sodium Hydroxide	23	30	2
	23	180	-
10% Ammonium Hydroxide	23	30	90
	23	90	87
	23	180	58
Organic Solvents			
Ethyl Alcohol	23	30	99
	23	180	94
Methyl Alcohol	23	30	91
	23	180	76
Isopropyl-Alcohol	23	30	100
	23	180	100
Isopropyl-Alcohol & Water (50:50)	23	30	93
	23	180	96
Turpentine	23	180	92
	23	30	66
Acetone	23	180	63
	23	30	90

Thermoplastic units

Plastic end Covers (Open/ Closed) & Back seal

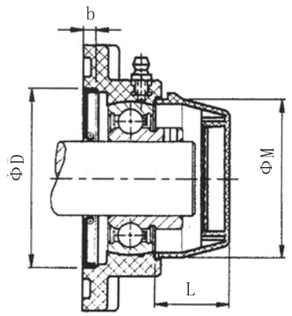

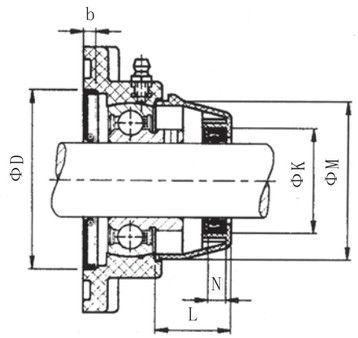

Flange Units

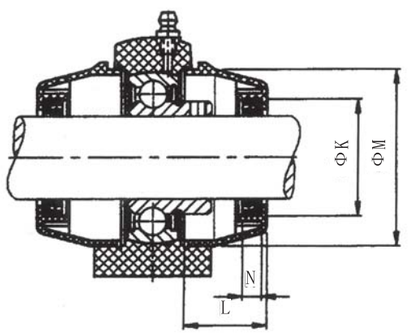

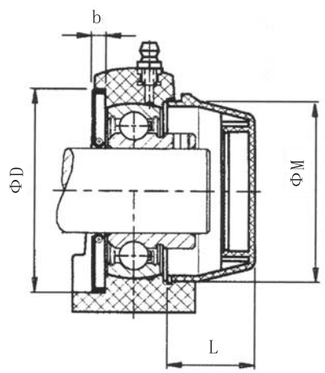

Pillow Blocks Units

Shaft diameter		Dimensions(mm)					
mm	inch	K	N	L	M	D	b
12	1/2	32	7	23	50	52	6
15	9/16 5/8	32	7	23	50	52	6
17	11/16	32	7	23	50	52	6
20	3/4	32	7	23	50	52	6
25	13/16 7/8 15/16 1	37	7	25	55	62	6
30	1-1/16 1-1/8 1-3/16 1-1/4	42	7	30	64	72	6
35	1-1/4 1-15/16 1-3/8 1-7/16	47	7	32	74.5	82	6
40	1-1/2 1-9/16	52	7	37	84	88	6
45	1-5/8 1-11/16 1-3/4	57	7	41	89	93	6
50	1-13/16 1-7/8 1-15/16 2	62	7	47	94	98	6
55	2 2-1/16 2-1/8 2-3/16	67	7	52	104	108	6
60	2-1/4 2-5/16 2-3/8 2-7/16	72	7	57	114	118	6

Thermoplastic Housed Pillow Block

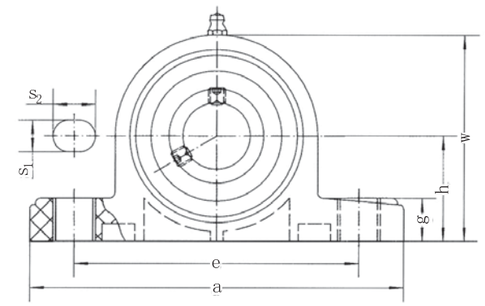

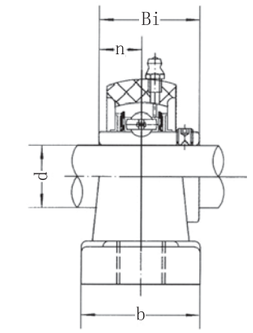

Unit No.	Shaft diameter mm	Shaft diameter inch	Dimensions mm inch h	a	e	b	S_1	S_2	g	w	B i	n	Weight (kg)	Max. Torque Bolt D	Max. Torque Nm	Housing No.	Bearing No.
MUCPPL204	20	3/4	33.3 1-5/16	127 5	95 3-3/4	38 1-1/2	11 7/16	14 9/16	14.2 9/16	65.5 2-9/16	31 1.2205	12.7 0.500	0.29	M10 3/8	18	PPL204	MUC204
MUCPPL205	25	13/16, 7/8, 15/16, 1	36.5 1-7/16	140.5 5-1/2	105 4-1/8	38 1-1/2	11 7/16	14 9/16	14.5 19/32	71 2-25/32	34 1.3425	14.3 0.563	0.34	M10 3/8	25	PPL205	MUC205
MUCPPL206	30	1-1/16, 1-1/8, 1-3/16, 1-1/4,	42.9 1-11/16	163 6-27/64	119 4-11/16	46 1-13/16	14 9/16	18 45/64	17.8 45/64	84 3-5/16	38.1 1.5000	15.9 0.626	0.54	M10 3/8	30	PPL206	MUC206
MUCPPL207	35	1-1/4, 1-5/16, 1-3/8, 1-7/16,	47.6 1-7/8	168 6-39/64	127 5	48 1-7/8	14 9/16	18 45/64	18 45/64	94.5 3-23/32	42.9 1.6890	17.5 0.689	0.78	M12 7/16	35	PPL207	MUC207
MUCPPL208	40	1-1/2, 1-9/16,	49.2 1-15/16	184 7-1/4	137 5-13/32	54 2-1/8	14 9/16	18 45/64	19.5 49/64	99 3-57/64	49.2 1.9370	19 0.748	0.97	M12 7/16	45	PPL208	MUC208
MUCPPL209	45	1-5/8, 1-11/16, 1-3/4	54 2-1/8	192 7-9/16	146 5-3/4	54 2-1/8	17 43/64	20 25/32	23 29/32	106 4-11/64	49.2 1.9370	19 0.748	1.09	M16 5/8	50	PPL209	MUC209
MUCPPL210	50	1-13/16, 1-7/8, 1-15/16, 2,	57.2 2-1/4	206 8-1/8	159 6-1/4	60 2-3/8	17 43/64	20 25/32	23 29/32	114 4-31/64	51.6 2.0315	19 0.748	1.20	M16 5/8	55	PPL210	MUC210
MUCPPL211	55	2, 2-1/16, 2-1/8, 2-3/16	63.5 2-1/2	219 8-5/8	171 6-47/64	60 2-3/8	20 25/32	23 29/32	23 29/32	125 4-59/64	55.6 2.1890	22.2 0.874	1.38	M16 5/8	60	PPL211	MUC211
MUCPPL212	60	2-1/4, 2-5/16, 2-3/8, 2-7/16,	69.8 2-3/4	241 9-1/2	184 7-1/4	70 2-3/4	20 25/32	23 29/32	25 63/64	138 5-7/16	65.1 2.5630	25.4 1.000	1.52	M16 5/8	65	PPL212	MUC212

Thermoplastic Housed Square Flange Units

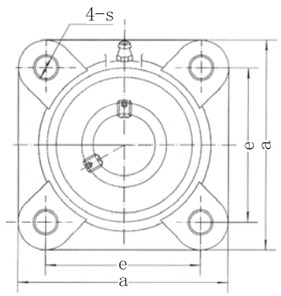

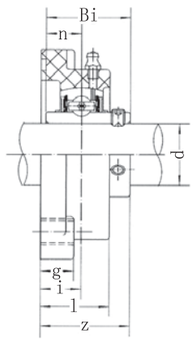

Unit No.	Shaft diameter mm	Shaft diameter inch	Dimensions mm inch a	e	g	l	s	z	i	B i	n	Weight (kg)	Max. Torque Bolt D	Max. Torque Nm	Housing No.	Bearing No.
MUCFPL204	20	3/4	86 3-3/8	63.5 2-33/64	13.4 2-33/64	27.8 1-3/32	11 7/16	36.3 1-7/16	18 45/64	31 1.2205	12.7 0.500	0.29	M10 3/8	18	FPL204	MUC204
MUCFPL205	25	13/16, 7/8, 15/16, 1	95 3-3/4	70 2-3/4	14.3 2-3/4	28 1-3/32	11 7/16	36.7 1-7/16	17 43/64	34.1 1.3425	14.3 0.563	0.36	M10 3/8	25	FPL205	MUC205
MUCFPL206	30	1-1/16, 1-1/8, 1-3/16, 1-1/4,	107 4-7/32	83 3-17/64	14.3 3-17/64	31.5 1-15/64	11 7/16	41.4 1-5/8	19.2 3/4	38.1 1.5000	15.9 0.626	0.50	M10 3/8	30	FPL206	MUC206
MUCFPL207	35	1-1/4, 1-5/16, 1-3/8, 1-7/16,	118 4-21/32	92 3-5/8	15.5 3-5/8	34.8 1-3/8	13 33/64	46.9 1-27/32	21.5 27/32	42.9 1.6890	17.5 0.689	0.74	M12 7/16	35	FPL207	MUC207
MUCFPL208	40	1-1/2, 1-9/16,	130 5-1/8	102 4-1/64	17 4-1/64	37.5 1-15/32	14 35/64	53.2 2-3/32	23 39/32	49.2 1.9370	19 0.748	0.97	M12 7/16	40	FPL208	MUC208
MUCFPL209	45	1-5/8, 1-11/16, 1-3/4	137 5-13/32	105 4-9/64	19 4-9/64	41 1-39/64	17 43/64	54.2 2-9/64	24 15/16	49.2 1.9370	19 0.748	1.10	M16 5/8	45	FPL209	MUC209
MUCFPL210	50	1-13/16, 1-7/8, 1-15/16, 2,	143 5-5/8	111 4-3/8	21 4-3/8	43 1-11/16	17 43/64	57.6 2-17/64	25 63/64	51.6 2.0315	19 0.748	1.25	M16 5/8	50	FPL210	MUC210
MUCFPL211	55	2, 2-1/16, 2-1/8, 2-3/16	162 6-3/8	130 5-1/8	20 5-1/8	43 1-11/16	19 3/4	58.4 2-18/64	25 63/64	55.6 2.1890	22.2 0.874	1.40	M16 5/8	55	FPL211	MUC211
MUCFPL212	60	2-1/4, 2-5/16, 2-3/8, 2-7/16,	175 6-57/64	143 5-5/8	20 5-5/8	48 1-57/64	19 3/4	68.7 2-45/64	29 1-9/64	65.1 2.5630	25.4 1.000	1.60	M16 5/8	60	FPL212	MUC212

Ball Bearing Units

Thermoplastic Housed 2-Bolt Flange Units

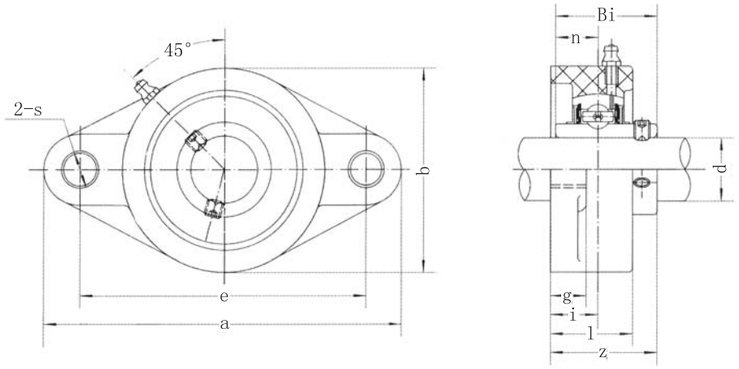

Unit No.	Shaft diameter mm	Shaft diameter inch	Dimensions mm / inch a	e	b	g	l	s	z	i	Bi	n	Weight (kg)	Max. Torque Bolt D	Max. Torque Nm	Housing No.	Bearing No.
MUCFLPL204	20	3/4	130 5-1/8	90 3-35/64	70 2-3/4	11.4 29/64	26.5 1-3/64	11 7/16	33.7 1-21/64	15.4 39/64	31 1.2205	12.7 0.500	0.24	M10 3/8	18	FLPL204	MUC204
MUCFLPL205	25	13/16, 7/8, 15/16, 1	131 5-5/32	99 3-57/64	69.5 2-47/64	13.5 17/32	29.1 1-9/64	11 7/16	36.7 1-7/16	17 43/64	34.1 1.3425	14.3 0.563	0.30	M10 3/8	25	FLPL205	MUC205
MUCFLPL206	30	1-1/16, 1-1/8, 1-3/16, 1-1/4,	148 5-53/64	117 4-39/64	80 3-5/32	13.3 17/32	30.5 1-13/64	11 7/16	41.2 1-5/8	19 3/4	38.1 1.5000	15.9 0.626	0.45	M10 3/8	30	FLPL206	MUC206
MUCFLPL207	35	1-1/4, 1-5/16, 1-3/8, 1-7/16,	164 6-29/64	130 5-1/8	90 3-35/64	16.1 41/64	32.8 1-19/64	13 33/64	43.4 1-45/64	18 45/64	42.9 1.6890	17.5 0.689	0.66	M12 7/16	35	FLPL207	MUC207
MUCFLPL208	40	1-1/2, 1-9/16,	176 6-59/64	144 5-43/64	100 3-15/16	20 25/32	37.5 1-15/32	14 35/64	51.7 2-1/32	21.5 27/32	49.2 1.9370	19 0.748	0.87	M12 7/16	40	FLPL208	MUC208
MUCFLPL209	45	1-5/8, 1-11/16, 1-3/4	188.5 7-27/64	148.5 5-27/32	108 4-15/64	21 53/64	41 1-39/64	17 43/64	54.2 2-9/64	24 15/16	49.2 1.9370	19 0.748	1.00	M16 5/8	45	FLPL209	MUC209
MUCFLPL210	50	1-13/16, 1-7/8, 1-15/16, 2,	197 7-3/4	157 6-3/16	115 4-17/32	21 53/64	43 1-11/16	17 43/64	57.6 2-17/64	25 63/64	51.6 2.0315	19 0.748	1.20	M16 5/8	50	FLPL210	MUC210
MUCFLPL211	55	2, 2-1/16, 2-1/8, 2-3/16	224 8-13/16	184 7-1/4	130 5-1/8	18 45/64	43 1-11/16	19 3/4	58.4 2-19/64	25 63/64	55.6 2.1890	22.2 0.874	1.42	M16 5/8	55	FLPL211	MUC211
MUCFLPL212	60	2-1/4, 2-5/16, 2-3/8, 2-7/16,	250 9-27/32	202 7-61/64	140 5-33/64	18 15/64	48 57/64	23 29/32	88.7 2-45/64	29 1-9/64	65.1 2.5630	25.4 1.000	1.60	M16 3/4	60	FLPL212	MUC212

Thermoplastic Housed Tap-Base Units

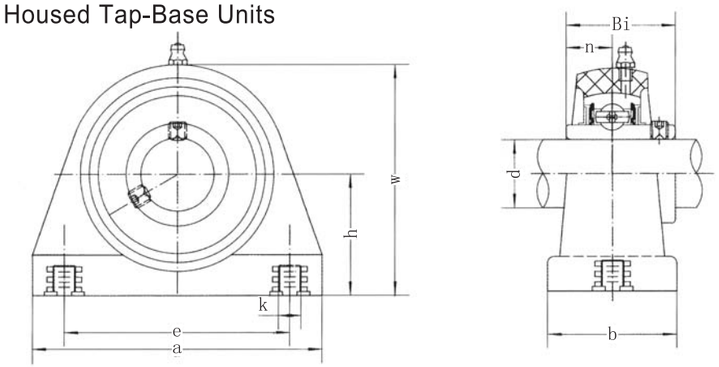

Unit No.	Shaft diameter mm	Shaft diameter inch	Dimensions mm / inch a	e	b	h	w	k	Bi	n	Weight (kg)	Max. Torque Bolt D	Max. Torque Nm	Housing No.	Bearing No.
MUCTBL204	20	3/4	72.8 2-55/64	50.8 2	34.5 1-23/64	33.3 1-5/16	66 2-19/32	M8	31 1.2205	12.7 0.500	0.35	M8 5/16	18	TBL204	MUC204
MUCTBL205	25	13/16, 7/8, 15/16, 1	76.2 3	50.8 2	39.5 1-9/16	36.5 1-7/16	73.5 2-57/64	M10	34.1 1.3425	14.3 0.563	0.40	M10 3/8	25	TBL205	MUC205
MUCTBL206	30	1-1/16, 1-1/8, 1-3/16, 1-1/4,	101 3-31/32	76.2 3	42.5 1-43/64	42.9 1-11/16	84 3-5/16	M10	38.1 1.5000	15.9 0.626	0.55	M10 3/8	30	TBL206	MUC206
MUCTBL207	35	1-1/4, 1-5/16, 1-3/8, 1-7/16,	110 4-21/64	82.6 3-1/4	47.5 1-7/8	47.6 1-7/8	95 3-47/64	M10	42.9 1.6890	17.5 0.689	0.80	M10 3/8	35	TBL207	MUC207
MUCTBL208	40	1-1/2, 1-9/16,	120 4-23/32	88.9 3-1/2	48 1-57/64	49.2 1-15/16	100.5 3-61/64	M12	49.2 1.9370	19 0.748	0.95	M12 7/16	45	TBL208	MUC208
MUCTBL209	45	1-5/8, 1-11/16, 1-3/4	124 4-7/8	95.3 3-3/4	50 1-31/32	54 2-1/8	108.5 4-9/32	M12	49.2 1.9370	19 0.748	1.10	M12 7/16	50	TBL209	MUC209
MUCTBL210	50	1-13/16, 1-7/8, 1-15/16, 2,	135 5-5/16	101.6 4	54 2-1/8	57.2 2-1/4	115 4-17/32	M16	51.6 2.0315	19 0.748	1.25	M16 5/8	55	TBL210	MUC210
MUCTBL211	55	2, 2-1/16, 2-1/8, 2-3/16	140 5-33/64	104 4-3/32	66 2-19/32	63.5 2-1/2	125 4-59/64	M20	55.6 2.1890	22.2 0.874	1.43	M20 3/4	60	TBL211	MUC211
MUCTBL212	60	2-1/4, 2-5/16, 2-3/8, 2-7/16,	150 5-29/32	114 4-31/64	68 2-43/64	69.9 2-3/4	138 5-7/16	M20	65.1 2.5630	25.4 1.000	1.58	M20 3/4	65	TBL212	MUC212

Thermoplastic Housed Flange Units

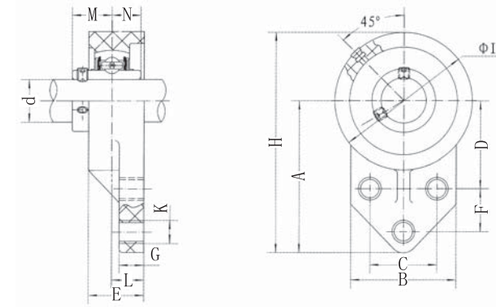

Unit No.	Shaft diameter mm	Shaft diameter inch	Dimensions mm / inch B	C	D	E	F	G	H	I	K	M	N	Weight (kg)	Max. Torque Bolt D	Max. Torque Nm	Housing No.	Bearing No.
MUCFBPL204	20	3/4	62 2-7/16	38.1 1-1/2	42.9 1-11/16	26.5 1-3/64	22.2 7/8	11.4 29/64	108 4-1/4	63.5 2-1/2	10.7 27/64	18.3 0.720	12.7 0.500	0.25	M10 3/8	18	FBPL204	MUC204
MUCFBPL205	25	13/16, 7/8, 15/16, 1	63.5 2-1/2	41.3 1-5/8	46 1-13/16	34 1-11/32	28.6 1-1/8	11.4 29/64	120.6 4-3/4	70 2-3/4	10.7 27/64	19.8 0.780	14.3 0.563	0.30	M10 3/8	25	FBPL205	MUC205
MUCFBPL206	30	1-1/16, 1-1/8, 1-3/16, 1-1/4,	76 3	47.6 1-7/8	52.4 2-1/16	32 1-17/64	31.8 1-1/4	13.3 33/64	138.5 5-29/64	83 3-17/64	10.7 27/64	22.2 0.874	15.9 0.626	0.46	M10 3/8	30	FBPL206	MUC206
MUCFBPL207	35	1-1/4, 1-5/16, 1-3/8, 1-7/16,	89 3-1/2	50.8 2	60.3 2-3/8	36.5 1-7/16	31.8 1-1/4	16.1 41/64	157 6-3/16	95 3-47/64	13.1 33/64	25.4 1	17.5 0.689	0.66	M12 7/16	35	FBPL207	MUC207
MUCFBPL208	40	1-1/2, 1-9/16,	78 3-5/64	50 1-31/32	60 2-23/64	36 1-27/64	41 1-39/64	16 5/8	164 6-15/32	100 3-15/16	13.1 33/64	30.2 1.189	19 0.748	0.78	M12 7/16	40	FBPL208	MUC208
MUCFBPL209	45	1-5/8, 1-11/16, 1-3/4	80 3-5/32	54 2-1/8	65 2-9/16	38 1-1/2	43 1-11/16	18 23/32	174 6-27/32	106 4-3/16	13.1 33/64	30.2 1.189	19 0.748	0.92	M12 7/16	45	FBPL209	MUC209
MUCFBPL210	50	1-13/16, 1-7/8, 1-15/16, 2,	86 3-3/8	58 2-9/32	68 2-11/16	40 1-37/64	46 1-13/16	18 23/32	184 7-1/4	112 4-13/32	13.1 33/64	32.6 1.283	19 0.748	1.12	M12 7/16	50	FBPL210	MUC210
MUCFBPL211	55	2, 2-1/16, 2-1/8, 2-3/16	90 3-35/64	62 2-7/16	78 3-5/64	43 1-11/16	50 1-31/32	18 23/32	207 8-5/32	130 5-1/8	16 5/8	33.4 1.315	22.2 0.874	1.47	M14 1/2	55	FBPL211	MUC211
MUCFBPL212	60	2-1/4, 2-5/16, 2-3/8, 2-7/16,	94 3-11/16	66 2-19/32	84 3-5/16	48 1-7/8	55 2-5/32	18 23/32	223 8-25/32	140 5-33/64	16 5/8	39.7 1.563	25.4 1	1.63	M14 1/2	60	FBPL212	MUC212

Thermoplastic Housed Flange Cartridge Units

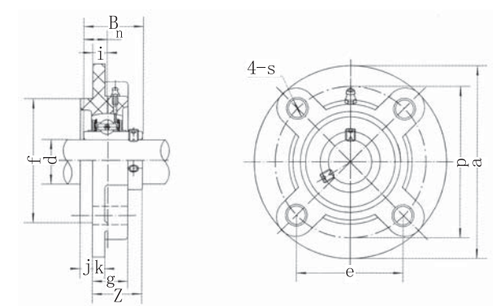

Unit No.	Shaft diameter mm	Shaft diameter inch	Dimensions mm / inch a	p	e	i	s	j	k	g	f	z	t	B	n	Weight (kg)	Max. Torque Bolt D	Max. Torque Nm	Housing No.	Bearing No.
MUCFCPL204	20	3/4	100 3-15/16	78 3-5/64	55.1 2-11/64	10 25/64	12 15/32	5 13/64	7 9/32	20.5 13/16	62 2-7/16	28.3 1-7/64	32.5 1-9/32	31 1.220	12.7 0.500	0.59	M10 3/8	18	FCPL204	MUC204
MUCFCPL205	25	13/16, 7/8, 15/16, 1	115 4-17/32	90 3-35/64	63.6 2-1/2	10 25/64	12 15/32	6 15/64	7 9/32	21 53/64	70 2-3/4	29.8 1-11/64	34 1-11/32	34.1 1.343	14.3 0.542	0.71	M10 3/8	25	FCPL205	MUC205
MUCFCPL206	30	1-1/16, 1-1/8, 1-3/16, 1-1/4,	125 4-59/64	100 3-15/16	70.7 2-25/32	10 25/64	12 15/32	8 5/16	8 5/16	23 29/32	80 3-5/32	32.2 1-17/64	36.5 1-7/16	38.1 1.500	15.9 0.626	0.94	M10 3/8	30	FCPL206	MUC206
MUCFCPL207	35	1-1/4, 1-5/16, 1-3/8, 1-7/16,	135 5-5/16	110 4-21/64	77.8 3-1/16	11 7/16	14 35/64	8 5/16	9 23/64	26 1-1/32	90 3-35/64	36.4 1-7/16	41 1-39/64	42.9 1.689	17.5 0.689	1.17	M12 7/16	35	FCPL207	MUC207
MUCFCPL208	40	1-1/2, 1-9/16,	145 5-45/64	120 4-23/32	84.8 3-11/32	11 7/16	14 35/64	10 25/64	9 23/64	26 1-1/32	100 3-15/16	41.2 1-5/8	45.5 1-51/64	49.2 1.937	19 0.748	1.42	M12 7/16	40	FCPL208	MUC208
MUCFCPL209	45	1-5/8, 1-11/16, 1-3/4	160 6-19/64	132 5-13/64	93.3 3-43/64	10 25/64	16 5/8	12 15/32	14 35/64	26 1-1/32	105 4-9/64	40.2 1-37/64	44.5 1-3/4	49.2 1.937	19 0.748	1.55	M14 1/2	45	FCPL209	MUC209
MUCFCPL210	50	1-13/16, 1-7/8, 1-15/16, 2,	165 6-1/2	138 5-7/16	97.6 3-27/32	10 25/64	16 5/8	12 15/32	14 35/64	28 1-7/64	110 4-21/64	42.6 1-43/64	47.5 1-7/8	51.6 2.031	19 0.748	1.76	M14 1/2	50	FCPL210	MUC210
MUCFCPL211	55	2, 2-1/16, 2-1/8, 2-3/16	185 7-9/32	150 5-29/32	106.1 4-11/64	13 33/64	19 3/4	12 15/32	15 19/32	31 1-7/32	125 4-59/64	46.4 1-53/64	51 2-1/64	55.6 2.189	22.2 0.874	2.15	M16 5/8	55	FCPL211	MUC211
MUCFCPL212	60	2-1/4, 2-5/16, 2-3/8, 2-7/16,	195 7-43/64	160 6-19/64	113.1 4-29/64	17 43/64	19 3/4	12 15/32	15 19/32	36 1-27/64	135 5-5/16	56.7 2-15/64	61.5 2-27/64	65.1 2.563	25.4 1.000	2.64	M16 5/8	60	FCPL212	MUC212

Thermoplastic Housed Take-up Units

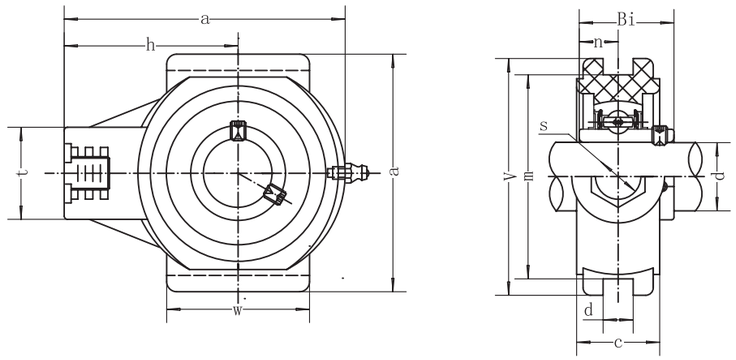

Unit No.	Shaft diameter mm	Shaft diameter inch	a	c	d	h	m	s	t	v	w	Bi	n	Weight (kg)	Housing No.	Bearing No.
			Dimensions mm / inch													
MUCTPL204	20	3/4	99 3-57/64	27.5 1-5/64	12 15/32	64 2-33/64	76 2-63/64	M16	36 1-27/64	88 3-15/32	47 1-27/32	31 1.220	12.7 0.500	0.35	TPL204	MUC204
MUCTPL205	25	13/16, 7/8, 15/16, 1	99 3-57/64	27.5 1-5/64	12 15/32	64 2-33/64	76 2-63/64	M16	36 1-27/64	88 3-15/32	47 1-27/32	34.1 1.343	14.3 0.542	0.40	TPL205	MUC205
MUCTPL206	30	1-1/16, 1-1/8, 1-3/16, 1-1/4,	125 4-59/64	34.5 1-23/64	12 15/32	76 2-63/64	89 3-1/2	M16	40 1-37/64	102 4-1/64	63 2-31/64	38.1 1.500	15.9 0.626	0.55	TPL206	MUC206
MUCTPL207	35	1-1/4, 1-5/16, 1-3/8, 1-7/16,	125 4-59/64	34.5 1-23/64	12 15/32	76 2-63/64	89 3-1/2	M16	40 1-37/64	102 4-1/64	63 2-31/64	42.9 1.689	17.5 0.689	0.80	TPL207	MUC207
MUCTPL208	40	1-1/2, 1-9/16,	140 5-33/64	34.5 1-23/64	16 5/8	85 3-11/32	102 4-1/64	M16	40 1-37/64	114 4-31/64	80 3-5/32	49.2 1.937	19 0.748	0.95	TPL208	MUC208
MUCTPL209	45	1-5/8, 1-11/16, 1-3/4	149 5-55/64	40 1-37/64	16 5/8	90 3-35/64	102 4-1/64	M20	50 1-31/32	117 4-39/64	85 3-11/32	49.2 1.937	19 0.748	1.10	TPL209	MUC209
MUCTPL210	50	1-13/16, 1-7/8, 1-15/16, 2,	149 5-55/64	40 1-37/64	16 5/8	90 3-35/64	102 4-1/64	M20	50 1-31/32	117 4-39/64	85 3-11/32	51.6 2.031	19 0.748	1.25	TPL210	MUC210
MUCTPL211	55	2, 2-1/16, 2-1/8, 2-3/16	171 6-47/64	38 1-1/2	22 55/64	106 4-11/64	130 5-1/8	M20	64 2-33/64	146 5-3/4	95 3-47/64	55.6 2.189	22.2 0.874	1.62	TPL211	MUC211
MUCTPL212	60	2-1/4, 25/16, 2-3/8, 2-7/16,	194 7-41/64	42 1-21/32	22 55/64	119 4-11/16	130 5-1/8	M20	64 2-33/64	146 5-3/4	102 4-1/64	65.1 2.563	25.4 1.000	1.78	TPL212	MUC212

Thermoplastic Housed Screw Conveyor Hanger Units

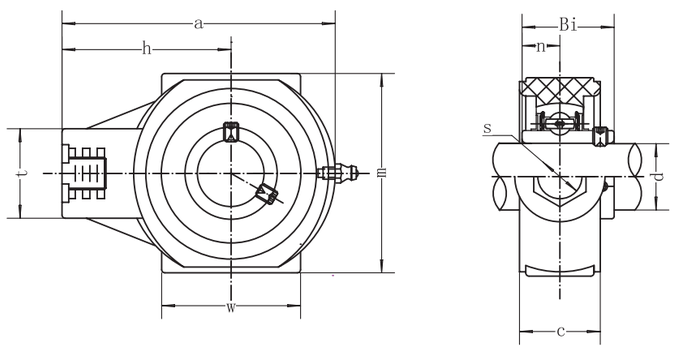

Unit No.	Shaft diameter mm	Shaft diameter inch	a	c	h	m	s	t	w	Bi	n	Weight (kg)	Housing No.	Bearing No.
			Dimensions mm / inch											
MUCHPL204	20	3/4	99 3-57/64	27.5 1-5/64	63.5 2-1/2	65 2-9/16	M16	36 1-27/64	47 1-27/32	31 1.220	12.7 0.500	0.35	HPL204	MUC204
MUCHPL205	25	13/16, 7/8, 15/16, 1	99 /64	27.5 1-5/64	63.5 2-1/2	74 2-29/32	M16	36 1-27/64	47 1-27/32	34.1 1.343	14.3 0.542	0.40	HPL205	MUC205
MUCHPL206	30	1-1/16, 1-1/8, 1-3/16, 1-1/4,	125 4-59/64	34.5 1-23/64	76 2-63/64	90 3-35/64	M16	40 1-37/64	63 2-31/64	38.1 1.500	15.9 0.626	0.55	HPL206	MUC206
MUCHPL207	35	1-1/4, 1-5/16, 1-3/8, 1-7/	125 4-59/64	34.5 1-23/64	76 2-63/64	90 3-35/64	M16	40 1-37/64	63 2-31/64	42.9 1.689	17.5 0.659	0.80	HPL207	MUC207
MUCHPL208	40	16,	140 5-33/64	34.5 1-23/64	85 3-11/32	100 3-15/16	M16	40 1-37/64	80 3-5/32	49.2 1.937	19 0.748	0.90	HPL208	MUC208
MUCHPL209	45	1-1/2, 1-9/16,	149 5-33/64	40 1-37/64	90 3-35/64	110 4-21/64	M20	50 1-31/32	85 3-11/32	49.2 1.937	19 0.748	1.10	HPL209	MUC209
MUCHPL210	50	1-5/8, 1-11/16, 1-3/4	149 5-55/64	40 1-37/64	90 3-35/64	110 4-21/64	M20	50 1-31/32	85 3-11/32	57.6 2.031	19 0.748	1.20	HPL210	MUC210
MUCHPL211	55	1-13/16, 1-7/8, 1-15/16, 2,	171 6-47/64	38 1-1/2	106 4-11/64	140 5-33/64	M20	64 2-33/64	95 3-47/64	55.6 2.189	22.2 0.874	1.40	HPL211	MUC211
MUCHPL212	60	2, 2-1/16, 2-1/8, 2-3/16	194 7-41/64	42 1-21/32	119 4-11/16	140 5-33/64	M20	64 2-33/64	102 4-1/64	65.1 2.563	25.4 1.000	1.52	HPL212	MUC212

Thermoplastic Housed Pillow Blocks

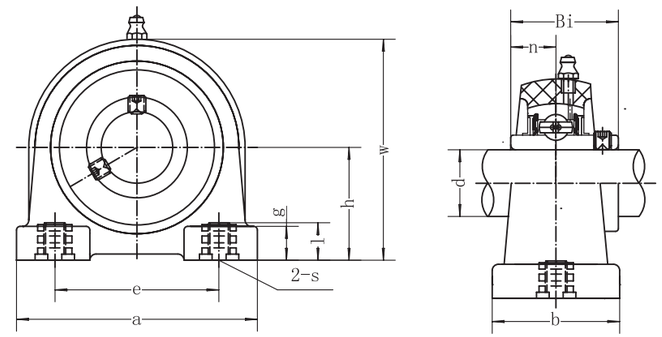

Unit No.	Shaft diameter mm	Shaft diameter inch	h	a	e	b	s	g	l	w	Bi	n	Weight (kg)	Max. Torque Bolt D	Max. Torque Nm	Housing No.	Bearing No.
			Dimensions mm / inch														
MUCPAPL204	20	3/4	30.2 1-3/16	76 3	52 2-3/64	40 1-9/16	M8	15 19/32	11 7/16	62 2-7/16	31 1.2205	12.7 0.500	0.55	M8	18	PAPL204	MUC204
MUCPAPL205	25	13/16, 7/8, 15/16, 1	36.5 1-7/16	84 3-5/16	56 2-13/64	38 1-1/2	M10	15 19/32	12 15/32	72 2-53/64	34.1 1.3425	14.3 0.563	0.61	M10	25	PAPL205	MUC205
MUCPAPL206	30	1-1/16, 1-1/8, 1-3/16, 1-1/4,	42.9 1-11/16	94 3-45/64	66 2-19/32	50 1-31/32	M10	18 45/64	12 15/32	84 3-5/16	38.1 1.5000	15.9 0.626	0.89	M10	30	PAPL206	MUC206
MUCPAPL207	35	1-1/4, 1-5/16, 1-3/8, 1-7/16,	47.6 1-7/8	110 4-21/64	80 3-5/32	55 2-11/64	M10	20 25/32	13 33/64	95 3-47/64	42.9 1.6890	17.5 0.689	1.31	M10	35	PAPL207	MUC207
MUCPAPL208	40	1-1/2, 1-9/16,	49.2 1-15/16	116 4-9/16	84 3-5/16	58 2-9/32	M12	20 25/32	13 33/64	100 3-15/16	49.2 1.9370	19 0.748	1.56	M12	40	PAPL208	MUC208
MUCPAPL209	45	1-5/8, 1-11/16, 1-3/4	54.2 2-9/64	120 4-23/32	90 3-35/64	60 2-23/64	M12	25 63/64	13 33/64	108 4-1/4	49.2 1.9370	19 0.748	1.70	M12	45	PAPL209	MUC209
MUCPAPL210	50	1-13/16, 1-7/8, 1-15/16, 2,	57.2 2-1/4	130 5-1/8	94 3-45/64	64 2-33/64	M16	25 63/64	14 35/64	116 4-9/16	51.6 2.0315	19 0.748	1.93	M16	50	PAPL210	MUC210
MUCPAPL211	55	2, 2-1/16, 2-1/8, 2-3/16	63.5 2-1/2	140 5-33/64	104 4-3/32	66 2-19/32	M16	25 63/64	14 35/64	125 4-59/64	55.6 2.1890	22.2 0.874	2.33	M16	55	PAPL211	MUC211
MUCPAPL212	60	2-1/4, 2-5/16, 2-3/8, 2-7/16,	69.9 2-3/4	150 5-29/32	114 4-31/64	68 2-43/64	M16	25 63/64	15 19/32	138 5-7/16	65.1 2.5630	25.4 1.000	2.90	M16	60	PAPL212	MUC212

Thermoplastic Housed Screw Conveyor Hanger Units

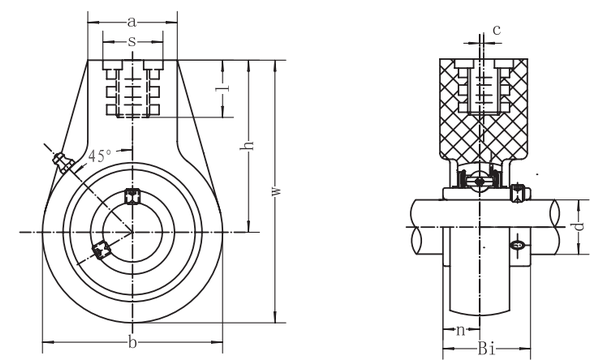

Unit No.	Shaft diameter mm	Shaft diameter inch	h	w	b	c	a	s	l	Bi	n	Weight (kg)	Housing No.	Bearing No.
			Dimensions mm / inch											
MUCHAPL204	20	3/4	64 2-33/64	96 3-25/32	64 2-23/64	0	40 1-37/64	M16	19 3/4	31 1.2205	12.7 0.500	0.48	HAPL204	MUC204
MUCHAPL205	25	13/16, 7/8, 15/16, 1	64 2-33/64	103 4-1/16	78 3-5/64	0	40 1-37/64	M20	19 3/4	34.1 1.3425	14.3 0.563	0.57	HAPL205	MUC205
MUCHAPL206	30	1-1/16, 1-1/8, 1-3/16, 1-1/4,	64 2-33/64	103 4-1/16	78 3-5/64	0	40 1-37/64	M20	19 3/4	38.1 1.5000	15.9 0.626	0.80	HAPL206	MUC206
MUCHAPL207	35	1-1/4, 1-5/16, 1-3/8, 1-7/16,	70 2-3/4	116 4-9/16	92 3-5/8	0	40 1-37/64	M20	19 3/4	42.9 1.6890	17.5 0.689	1.10	HAPL207	MUC207
MUCHAPL208	40	1-1/2, 1-9/16,	73 2-7/8	121 4-49/64	96 3-25/32	2 5/64	40 1-37/64	M20	19 3/4	49.2 1.9370	19 0.748	1.35	HAPL208	MUC208
MUCHAPL209	45	1-5/8, 1-11/16, 1-3/4	82 3-15/64	136 5-23/64	108 4-1/4	5 13/64	48 1-57/64	M20	21 53/64	49.2 1.9370	19 0.748	1.46	HAPL209	MUC209
MUCHAPL210	50	1-13/16, 1-7/8, 1-15/16, 2,	83 3-17/64	142 5-19/32	118 4-41/64	5 13/64	48 1-57/64	M24	21 53/64	51.6 2.0315	19 0.748	1.67	HAPL210	MUC210
MUCHAPL211	55	2, 2-1/16, 2-1/8, 2-3/16	87 3-27/64	150 5-29/32	126 4-61/64	7 9/32	60 2-23/64	M30	25 63/64	55.6 2.1890	22.2 0.874	2.07	HAPL211	MUC211
MUCHAPL212	60	2-1/4, 2-5/16, 2-3/8, 2-7/16,	102 4-1/64	173 6-13/16	142 5-19/32	9 23/64	60 2-23/64	M30	28 1-7/64	65.1 2.5630	25.4 1.000	2.63	HAPL212	MUC212